Infrared Transceiver Module (SIR, 115.2 kbit/s) for IrDA® Applications

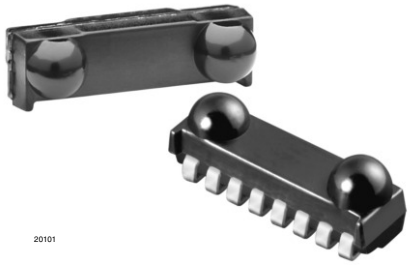

MEMBER IrDA

DESCRIPTION

The TFDU4301 is a low profile (2.5 mm) infrared transceiver module. It is compliant to the latest IrDA® physical layer standard for fast infrared data communication, supporting IrDA speeds up to 115.2 kbit/s (SIR) and carrier based remote control. The transceiver module consists of a PIN photodiode, an infrared emitter (IRED), and a low-power control IC to provide a total front-end solution in a single package.

This device covers an extended IrDA low power range of close to 1 m. With an external current control resistor the current can be adjusted for shorter ranges.

The RXD output pulse width is independent of the optical input pulse width and stays always at a fixed pulse width thus making the device optimum for standard endecs. TFDU4301 has a tri-state output and is floating in shut-down mode with a weak pull-up.

APPLICATIONS

- Ideal for battery operated applications
- Telecommunication products (cellular phones, pagers)
- Digital still and video cameras
- Printers, fax machines, photocopiers, screen projectors
- Medical and industrial data collection
- Diagnostic systems
- Notebook computers, desktop PCs, palmtop computers (Win CE, Palm PC), PDAs
- Internet TV boxes, video conferencing systems
- External infrared adapters (dongles)
- Data loggers
- GPS
- Kiosks, POS, point and pay devices including IrFM - applications

FEATURES

Pb-free

e3

RoHS COMPLIANT

- Compliant to the latest IrDA physical layer specification (9.6 kbit/s to 115.2 kbit/s) and TV remote control, bi-directional operation included
- Operates from 2.4 V to 5.5 V within specification over full temperature range from - 30 °C to + 85 °C
- Split power supply, transmitter and receiver can be operated from two power supplies with relaxed requirements saving costs, US patent no. 6.157.476
- Extended IrDA low power range to about 70 cm
- Typical remote control range 12 m
- Low power consumption (< typ. supply current 70 µA)
- Power shutdown mode (< 1 µA shutdown current in full temperature range, up to 85 °C)
- Low profile (2.5 mm) (L x W x H in mm): 8.5 × 2.5 × 3.1
- Surface mount package
- High efficiency emitter
- Low profile (universal) package capable of surface mount soldering to side and top view orientation
- Directly interfaces with various super I/O and controller devices as e.g. TOIM4232 or TOIM5232
- Tri-state-receiver output, floating in shut down with a weak pull-up
- Compliant with IrDA background light specification
- EMI immunity in GSM bands > 300 V/m verified
- Qualified for lead (Pb)-free and Sn/Pb processing (MSL4)
- Compliant to RoHS directive 2002/95/EC and in accordance to WEEE 2002/96/EC

PRODUCT SUMMARY

PART NUMBER	DATA RATE (kbit/s)	DIMENSIONS H x L x W (mm x mm x mm)	LINK DISTANCE (m)	OPERATING VOLTAGE (V)	IDLE SUPPLY CURRENT (mA)
TFDU4301	115.2	3.1 x 8.5 x 2.5	0 to ≥ 0.7	2.4 to 5.5	0.07

PARTS TABLE

PART	DESCRIPTION	QTY/REEL
TFDU4301-TR1	Oriented in carrier tape for side view surface mounting	750 pcs
TFDU4301-TR3	Oriented in carrier tape for side view surface mounting	2500 pcs
TFDU4301-TT1	Oriented in carrier tape for top view surface mounting	750 pcs
TFDU4301-TT3	Oriented in carrier tape for top view surface mounting	2500 pcs

FUNCTIONAL BLOCK DIAGRAM

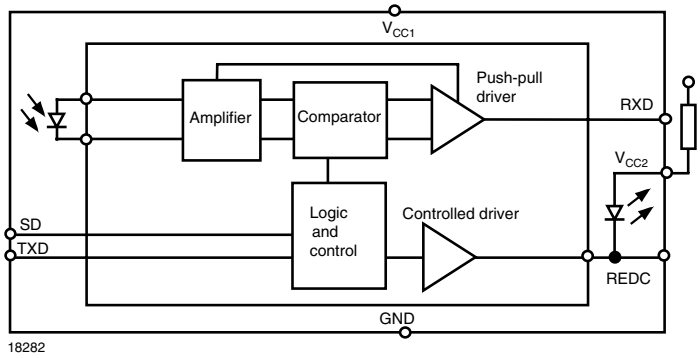

PIN DESCRIPTION				
PIN NUMBER	FUNCTION	DESCRIPTION	I/O	ACTIVE
1	V_{CC2} IRED anode	Connect IRED anode directly to the power supply (V_{CC2}). IRED current can be decreased by adding a resistor in series between the power supply and IRED anode. A separate unregulated power supply can be used at this pin.		
2	IRED cathode	IRED cathode, internally connected to the driver transistor.		
3	TXD	This Schmitt-Trigger input is used to transmit serial data when SD is low. An on-chip protection circuit disables the LED driver if the TXD pin is asserted for longer than 100 µs. The input threshold voltage adapts to and follows the logic voltage swing defined by the applied supply voltage.	I	High
4	RXD	Received data output, push-pull CMOS driver output capable of driving standard CMOS or TTL loads. During transmission the RXD output is active and mirrors the transmit signal. No external pull-up or pull-down resistor is required. Floating with a weak pull-up of 500 kΩ (typ.) in shutdown mode. The voltage swing is defined by the applied supply voltage.	O	Low
5	SD	Shutdown. The input threshold voltage adapts to and follows the logic voltage swing defined by the applied supply voltage.	I	High
6	V_{CC1}	Supply voltage		
7	NC	Not connected	I	
8	GND	Ground		

PINOUT

TFDU4301
weight 75 mg

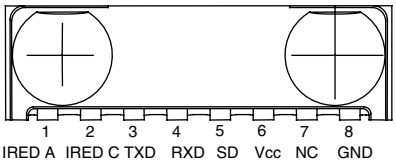

18101-1

Definitions:

In the Vishay transceiver data sheets the following nomenclature is used for defining the IrDA operating modes:
SIR: 2.4 kbit/s to 115.2 kbit/s, equivalent to the basic serial infrared standard with the physical layer version IrPhy 1.0
MIR: 576 kbit/s to 1152 kbit/s
FIR: 4 Mbit/s
VFIR: 16 Mbit/s
MIR and FIR were implemented with IrPhy 1.1, followed by IrPhy 1.2, adding the SIR low power standard. IrPhy 1.3 extended the low power option to MIR and FIR and VFIR was added with IrPhy 1.4. A new version of the standard in any case obsoletes the former version.
With introducing the updated versions the old versions are obsolete. Therefore the only valid IrDA standard is the actual version IrPhy 1.4 (in Oct. 2002).

ABSOLUTE MAXIMUM RATINGS

PARAMETER	TEST CONDITIONS	SYMBOL	MIN.	TYP.	MAX.	UNIT
Supply voltage range, transceiver	- 0.3 V < V_{CC2} < 6 V	V_{CC1}	- 0.5		+ 6	V
Supply voltage range, transmitter	- 0.5 V < V_{CC1} < 6 V	V_{CC2}	- 0.5		+ 6	V
RXD output voltage	- 0.5 V < V_{CC1} < 6 V	V_{RXD}	- 0.5		V_{CC1} + 0.5	V
Voltage at all inputs	Note: $V_{in} \geq V_{CC1}$ is allowed	V_{IN}	- 0.5		+ 6	V
Input current	For all pins, except IRED anode pin				10	mA
Output sinking current					25	mA
Power dissipation	See derating curve	P_D			250	mW
Junction temperature		T_J			125	°C
Ambient temperature range (operating)		T_{amb}	- 30		+ 85	°C
Storage temperature range		T_{stg}	- 40		+ 100	°C
Soldering temperature	See recommended solder profile				260	°C
Average output current, pin 1		$I_{IRED(DC)}$			85	mA
Repetitive pulsed output current, pin 1 to pin 2	t < 90 µs, t_{on} < 20 %	$I_{IRED(RP)}$			430	mA
ESD protection		V_{ESD}	1			kV
Latchup			|± 100|			mA

Note

Reference point ground (pin 8) unless otherwise noted.
Typical values are for DESIGN AID ONLY, not guaranteed nor subject to production testing.
We apologize to use sometimes in our documentation the abbreviation LED and the word light emitting diode instead of infrared emitting diode (IRED) for IR-emitters. That is by definition wrong; we are here following just a bad trend.
Typical values are for design aid only, not guaranteed nor subject to production testing and may vary with time.

EYE SAFETY INFORMATION

STANDARD	CLASSIFICATION
IEC/EN 60825-1 (2007-03), DIN EN 60825-1 (2008-05) “SAFETY OF LASER PRODUCTS - Part 1: equipment classification and requirements”, simplified method	Class 1
IEC 62471 (2006), CIE S009 (2002) “Photobiological Safety of Lamps and Lamp Systems”	Exempt
DIRECTIVE 2006/25/EC OF THE EUROPEAN PARLIAMENT AND OF THE COUNCIL of 5th April 2006 on the minimum health and safety requirements regarding the exposure of workers to risks arising from physical agents (artificial optical radiation) (19th individual directive within the meaning of article 16(1) of directive 89/391/EEC)	Exempt

Note

Vishay transceivers operating inside the absolute maximum ratings are classified as eye safe according the above table.

ELECTRICAL CHARACTERISTICS

PARAMETER	TEST CONDITIONS	SYMBOL	MIN.	TYP.	MAX.	UNIT
TRANSCEIVER						
Supply voltage		V_{CC1}	2.4		5.5	V
Operating temperature range		T_A	- 30		+ 85	°C
Data rates			9.6		115.2	kbit/s
Idle supply current at V_{CC1} (receive mode, no signal)	SD = low, T_{amb} = - 25 °C to + 85 °C independent of ambient light, V_{CC1} = V_{CC2} = 2.4 V to 5.5 V	I_{CC1}	40	70	150	µA
	SD = low, T_{amb} = 25 °C, V_{CC1} = V_{CC2} = 2.4 V to 5.5 V	I_{CC1}	40	70	100	µA
Average dynamic supply current, transmitting	I_{IRED} = 300 mA, 20 % duty cycle	I_{CC1}		0.6	2	mA
Standby (SD) (1) supply current	SD = high, T_{amb} = - 25 °C to + 85 °C independent of ambient light	I_{SD}		0.01	1	µA
RXD to V_{CC1} impedance		R_{RXD}	400	500	600	kΩ

ELECTRICAL CHARACTERISTICS						
PARAMETER	**TEST CONDITIONS**	**SYMBOL**	**MIN.**	**TYP.**	**MAX.**	**UNIT**
TRANSCEIVER						
Input voltage low (TXD, SD)		V_{ILo}	- 0.3		0.4	V
Input voltage high (SD)	For compliance with ISD spec.	V_{IHi}	V_{CC1} - 0.3		6	V
Input voltage high (TXD)		V_{IHi}	V_{CC1} - 0.5		6	V
Timing logic decision level				0.5 x V_{CC1}		
Input leakage current low	$V_{ILo} \leq 0.3$ V	I_{ILo}		0.01	10	µA
Input leakage current high	$V_{IHi} \geq V_{CC1}$ - 0.3 V	I_{IHi}		0.01	10	µA
Input capacitance (TXD, SD)		C_{IN}			5	pF
Output voltage low, RXD	C_{load} = 8 pF, $I_{OLo} \leq \lvert + 500\ \mu A \rvert$	V_{OLo}			0.4	V
Output voltage high, RXD	I_{OH} = - 200 µA	V_{OHi}	0.8 x V_{CC1}		V_{CC1}	V

Note

Tested at T_{amb} = 25 °C, $V_{CC1} = V_{CC2}$ = 2.4 V to 5.5 V unless otherwise noted.
Typical values are for DESIGN AID ONLY, not guaranteed nor subject to production testing.
(1) SD mode becomes active when SD is set high for more than 0.2 µs. In SD mode the detector is disabled and the output disconnected.

OPTOELECTRONIC CHARACTERISTICS (1)						
PARAMETER	**TEST CONDITIONS**	**SYMBOL**	**MIN.**	**TYP.**	**MAX.**	**UNIT**
RECEIVER						
Minimum irradiance E_e in angular range (3)	9.6 kbit/s to 115.2 kbit/s λ = 850 nm to 900 nm; α = 0°, 15°	E_e		40 (4)	80 (8)	mW/m² (µW/cm²)
Maximum irradiance E_e In Angular Range (4)	λ = 850 nm to 900 nm	E_e		5 (500)		kW/m² (mW/cm²)
Maximum no detection irradiance (2)	λ = 850 nm to 900 nm t_r, t_f < 40 ns, t_{po} = 1.6 µs at f = 115 kHz, no output signal allowed	E_e	4 (0.4)			mW/m² (µW/cm²)
Rise time of output signal	10 % to 90 %, C_L = 8 pF	$t_{r(RXD)}$	10	30	80	ns
Fall time of output signal	90 % to 10 %, C_L = 8 pF	$t_{f(RXD)}$	10	30	80	ns
RXD pulse width of output signal	Input pulse length > 1.2 µs	t_{PW}	1.7	2.2	3	µs
Stochastic jitter, leading edge	Input irradiance = 100 mW/m², ≤ 115.2 kbit/s				350	ns
Standby/shutdown delay, receiver startup time	After shutdown active or power-on				500	µs
Latency		t_L		50	150	µs
TRANSMITTER						
IRED operating current limitation	No external resistor for current limitation (5)	I_D	200	300	430	mA
Forward voltage of built-in IRED	I_f = 300 mA	V_f	1.4	1.8	1.9	V
Output leakage IRED current	TXD = 0 V, 0 < V_{CC1} < 5.5 V	I_{IRED}	- 1	0.01	1	µA
Output radiant intensity	α = 0°, 15° TXD = high, SD = low	I_e	30	65	370	mW/sr
	V_{CC1} = 5 V, α = 0°, 15° TXD = low or SD = high (receiver is inactive as long as SD = high)	I_e			0.04	mW/sr
Output radiant intensity, angle of half intensity		α		± 24		°
Peak - emission wavelength (6)		λ_p	880		900	nm
Spectral bandwidth		$\Delta\lambda$		45		nm

OPTOELECTRONIC CHARACTERISTICS (1)						
PARAMETER	TEST CONDITIONS	SYMBOL	MIN.	TYP.	MAX.	UNIT
TRANSMITTER						
Optical rise time, fall time		t_{ropt}, t_{fopt}	10	50	300	ns
Optical output pulse duration	Input pulse width 1.6 < t_{TXD} < 23 µs	t_{opt}	t_{TXD} - 0.15		t_{TXD} + 0.15	µs
	Input pulse width t_{TXD} ≥ 23 µs	t_{opt}	23	50	100	µs
Optical overshoot					25	%

Note

(1) Tested at T_{amb} = 25 °C, V_{CC1} = V_{CC2} = 2.4 V to 5.5 V unless otherwise noted.
Typical values are for DESIGN AID ONLY, not guaranteed nor subject to production testing.

(2) Equivalent to IrDA background light and electromagnetic field test: fluorescent lighting immunity.

(3) IrDA sensitivity definition: minimum irradiance E_e in angular range, power per unit area. The receiver must meet the BER specification while the source is operating at the minimum intensity in angular range into the minimum half-angular range at the maximum link length.

(4) Maximum irradiance E_e in angular range, power per unit area. The optical delivered to the detector by a source operating at the maximum intensity in angular range at minimum link length must not cause receiver overdrive distortion and possible ralated link errors. If placed at the active output interface reference plane of the transmitter, the receiver must meet its bit error ratio (BER). For more definitions see the document “Symbols and Terminology” on the Vishay website.

(5) Using an external current limiting resistor is allowed and recommended to reduce IRED intensity and operating current when current reduction is intended to operate at the IrDA low power conditions. E.g. for V_{CC2} = 3.3 V a current limiting resistor of R_S = 56 Ω will allow a power minimized operation at IrDA low power conditions.

(6) Due to this wavelength restriction compared to the IrDA spec of 850 nm to 900 nm the transmitter is able to operate as source for the standard remote control applications with codes as e.g. Phillips RC5/RC6® or RECS 80.

RECOMMENDED CIRCUIT DIAGRAM

Operated with a clean low impedance power supply the TFDU4301 needs no additional external components. However, depending on the entire system design and board layout, additional components may be required (see figure 1).

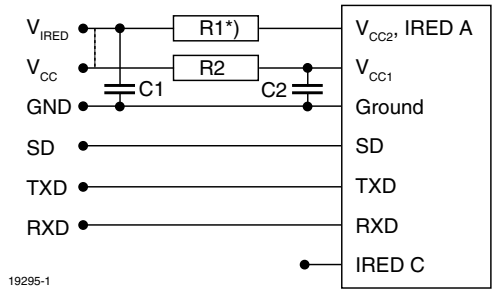

Fig. 1 - Recommended Application Circuit

Note

*) R1 is optional when reduced intensity is used

The capacitor C1 is buffering the supply voltage and eliminates the inductance of the power supply line. This one should be a tantalum or other fast capacitor to guarantee the fast rise time of the IRED current. The resistor R1 is the current limiting resistor, which may be used to reduce the operating current to levels below the specified controlled values for saving battery power.

Vishay’s transceivers integrate a sensitive receiver and a built-in power driver. The combination of both needs a careful circuit board layout. The use of thin, long, resistive and inductive wiring should be avoided. The shutdown input must be grounded for normal operation, also when the shutdown function is not used.

TABLE 1 - RECOMMENDED APPLICATION CIRCUIT COMPONENTS		
COMPONENT	RECOMMENDED VALUE	VISHAY PART NUMBER
C1	4.7 µF, 16 V	293D 475X9 016B
C2	0.1 µF, ceramic	VJ 1206 Y 104 J XXMT
R1	Depends on current to be adjusted	
R2	47 Ω, 0.125 W	CRCW-1206-47R0-F-RT1

The inputs (TXD, SD) and the output RXD should be directly connected (DC - coupled) to the I/O circuit. The capacitor C2 combined with the resistor R2 is the low pass filter for smoothing the supply voltage. R2, C1 and C2 are optional and dependent on the quality of the supply voltages $V_{CC}1$ and injected noise. An unstable power supply with dropping voltage during transmision may reduce the sensitivity (and transmission range) of the transceiver.

The placement of these parts is critical. It is strongly recommended to position C2 as close as possible to the transceiver pins.

When extended wiring is used as in bench tests the inductance of the power supply can cause dynamically a voltage drop at V_{CC2}. Often some power supplies are not able to follow the fast current rise time. In that case another 4.7 µF (type, see table under C1) at V_{CC2} will be helpful.

Under extreme EMI conditions as placing an RF-transmitter antenna on top of the transceiver, we recommend to protect all inputs by a low-pass filter, as a minimum a 12 pF capacitor, especially at the RXD port. The transceiver itself withstands EMI at GSM frequencies above 500 V/m. When interference is observed, the wiring to the inputs picks it up. It is verified by DPI measurements that as long as the interfering RF - voltage is below the logic

threshold levels of the inputs and equivalent levels at the outputs no interferences are expected.
One should keep in mind that basic RF - design rules for circuits design should be taken into account. Especially longer signal lines should not be used without termination. See e.g. “The Art of Electronics” Paul Horowitz, Winfield Hill, 1989, Cambridge University Press, ISBN: 0521370957.

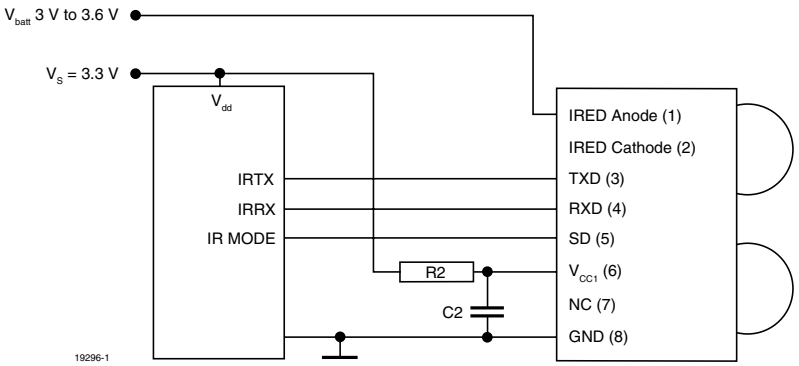

Fig. 2 - Typical Application Circuit

Figure 2 shows an example of a typical application for to work with a separate supply voltage V_S and using the transceiver with the IRED Anode connected to the unregulated battery V_{batt}. This method reduces the peak load of the regulated power supply and saves therefore costs. Alternatively all supplies can also be tied to only one voltage source. R1 and C1 are not used in this case and are depending on the circuit design in most cases not necessary.

I/O AND SOFTWARE

In the description, already different I/Os are mentioned. Different combinations are tested and the function verified with the special drivers available from the I/O suppliers. In special cases refer to the I/O manual, the Vishay application notes, or contact directly Vishay Sales, Marketing or Application.
For operating at RS232 ports the ENDECS TOIM4232 or TOIM5232 is recommended.

Note

TFDU4301 echoes the TXD signal at the RXD output during transmission. For communication this signal is to be correctly ignored by the controller or the software. The echo signal is implemented for test purposes in mass production.

CURRENT DERATING DIAGRAM

Figure 3 shows the maximum operating temperature when the device is operated without external current limiting resisor.

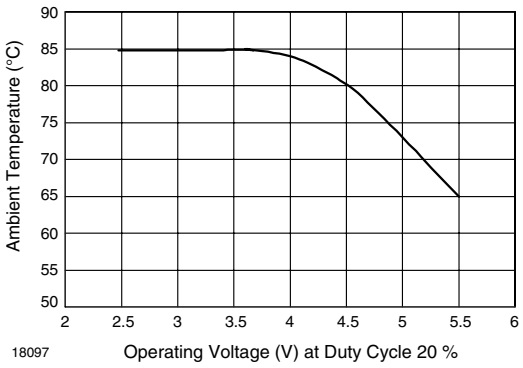

Fig. 3 - Current Derating Diagram

TABLE 2. TRUTH TABLE

INPUTS			OUTPUTS		REMARK
SD	TXD	OPTICAL INPUT IRRADIANCE mW/m²	RXD	TRANSMITTER	OPERATION
High > 1 ms	x	x	Weakly pulled (500 kΩ) to V_{CC1}	0	Shutdown
Low	High	x	Low (active)	I_e	Transmitting
Low	High > 100 µs	x	High inactive	0	Protection is active
Low	Low	< 4	High inactive	0	Ignoring low signals below the IrDA defined threshold for noise immunity
Low	Low	> min. detection threshold irradiance < max. detection threshold irradiance	Low (active)	0	Response to an IrDA compliant optical input signal
Low	Low	> min. detection threshold irradiance	Undefined	0	Overload conditions can cause unexpected outputs

RECOMMENDED SOLDER PROFILES

Solder Profile for Sn/Pb Soldering

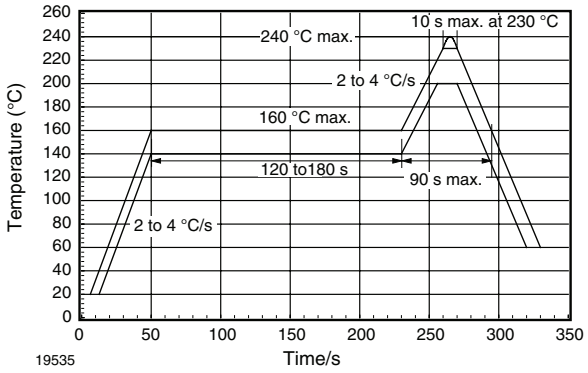

Fig. 4 - Recommended Solder Profile for Sn/Pb Soldering

Lead (Pb)-free, Recommended Solder Profile

The TFDU4301 is a lead (Pb)-free transceiver and qualified for lead (Pb)-free processing. For lead (Pb)-free solder paste like $Sn_{(3.0\text{-}4.0)}Ag_{(0.5\text{-}0.9)}Cu$, there are two standard reflow profiles: Ramp-Soak-Spike (RSS) and Ramp-To-Spike (RTS). The Ramp-Soak-Spike profile was developed primarily for reflow ovens heated by infrared radiation. With widespread use of forced convection reflow ovens the Ramp-To-Spike profile is used increasingly. Shown below in figure 5 and 6 are VISHAY's recommended profiles for use with the TFDU4301 transceivers. For more details please refer to the application note "SMD Assembly Instructions".
A ramp-up rate less than 0.9 °C/s is not recommended. Ramp-up rates faster than 1.3 °C/s could damage an optical part because the thermal conductivity is less than compared to a standard IC.

Wave Soldering

For TFDUxxxx and TFBSxxxx transceiver devices wave soldering is not recommended.

Manual Soldering

Manual soldering is the standard method for lab use. However, for a production process it cannot be recommended because the risk of damage is highly dependent on the experience of the operator. Nevertheless, we added a chapter to the above mentioned application note, describing manual soldering and desoldering.

Storage

The storage and drying processes for all VISHAY transceivers (TFDUxxxx and TFBSxxx) are equivalent to MSL4.
The data for the drying procedure is given on labels on the packing and also in the application note "Taping, Labeling, Storage and Packing".

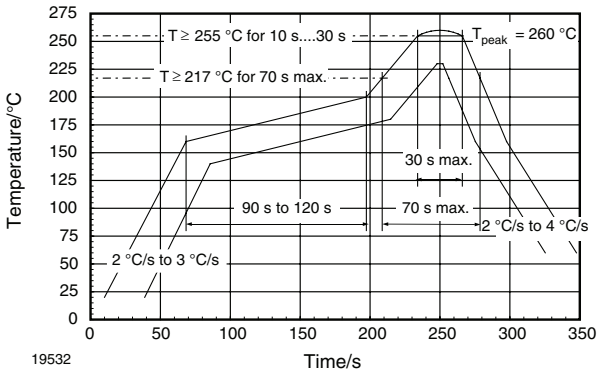

Fig. 5 - Solder Profile, RSS Recommendation

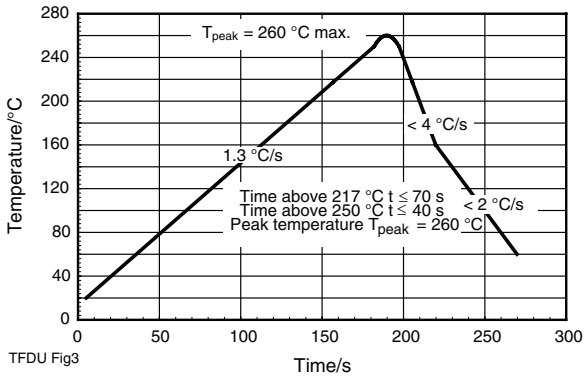

Fig. 6 - RTS Recommendation

PACKAGE DIMENSIONS in millimeters

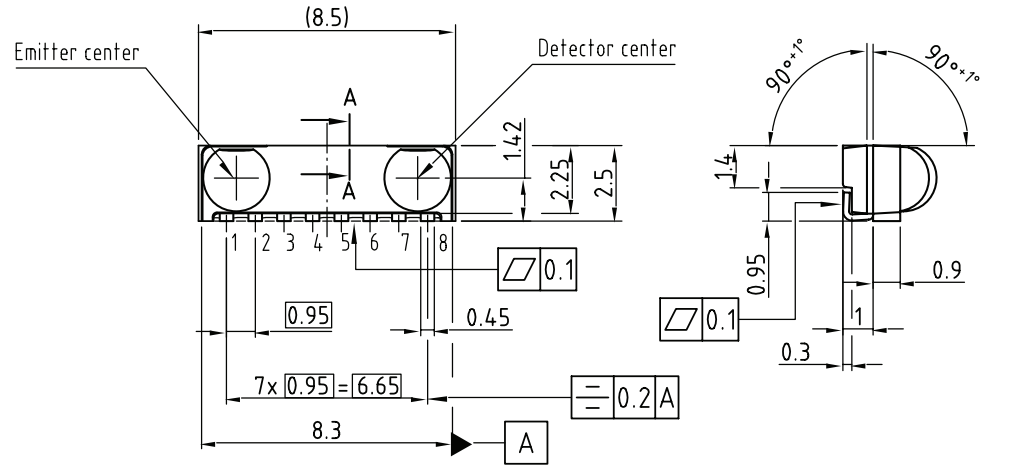

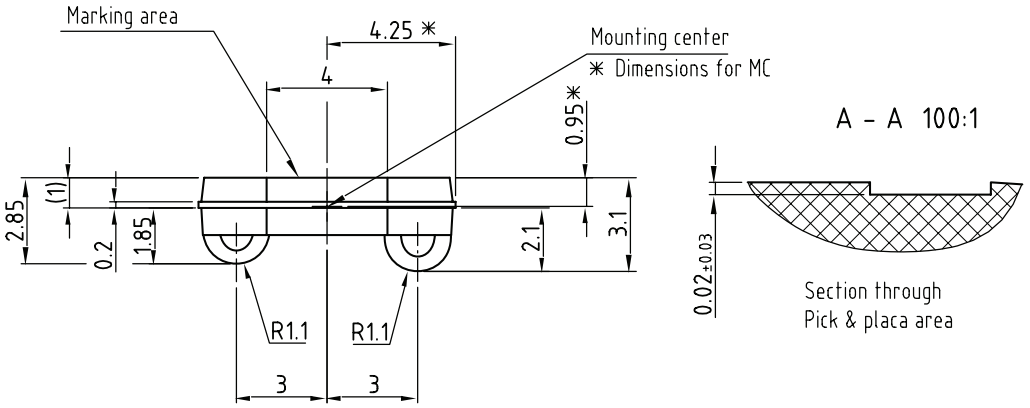

Drawing-No.: 6.550-5252.01-4
Issue: 2; 12.10.04

20627

technical drawings according to DIN specifications

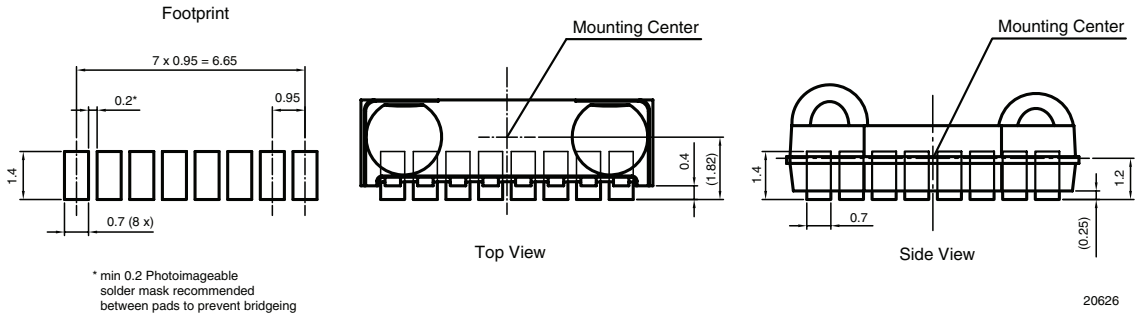

20626

REEL DIMENSIONS in millimeters

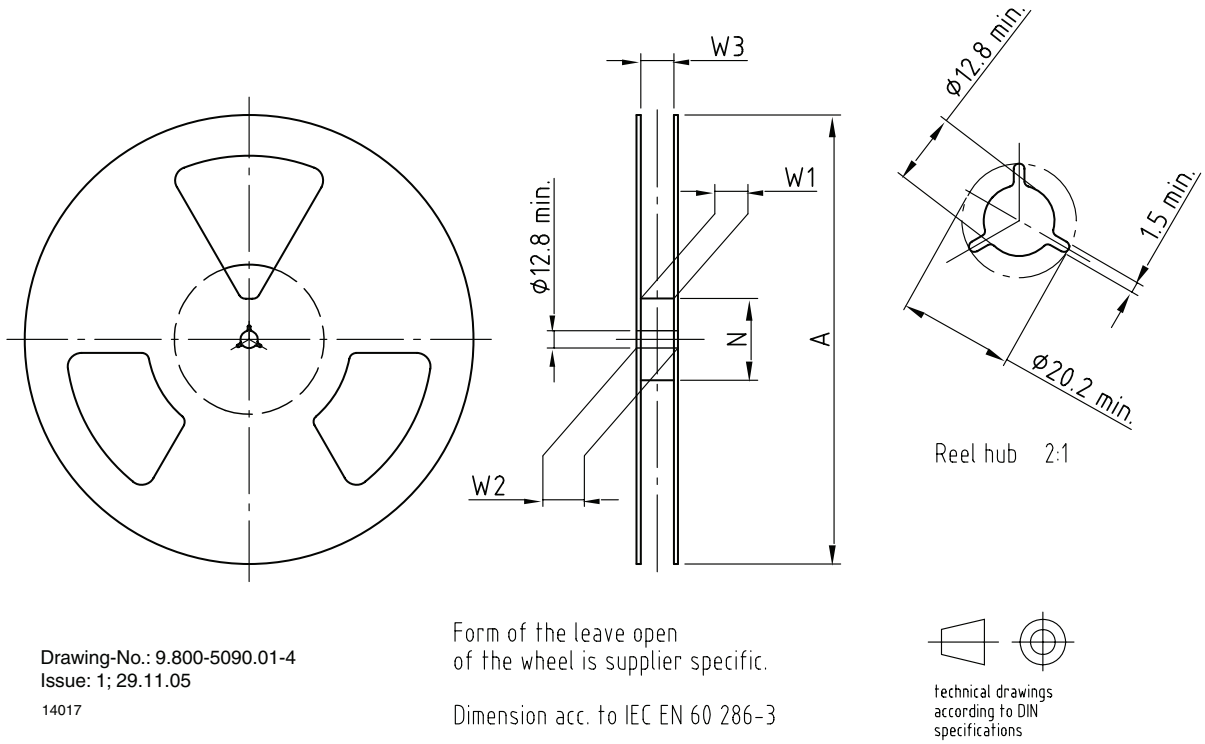

TAPE WIDTH (mm)	A MAX. (mm)	N (mm)	W_1 MIN. (mm)	W_2 MAX. (mm)	W_3 MIN. (mm)	W_3 MAX. (mm)
16	180	60	16.4	22.4	15.9	19.4
16	330	50	16.4	22.4	15.9	19.4

TAPE DIMENSIONS in millimeters

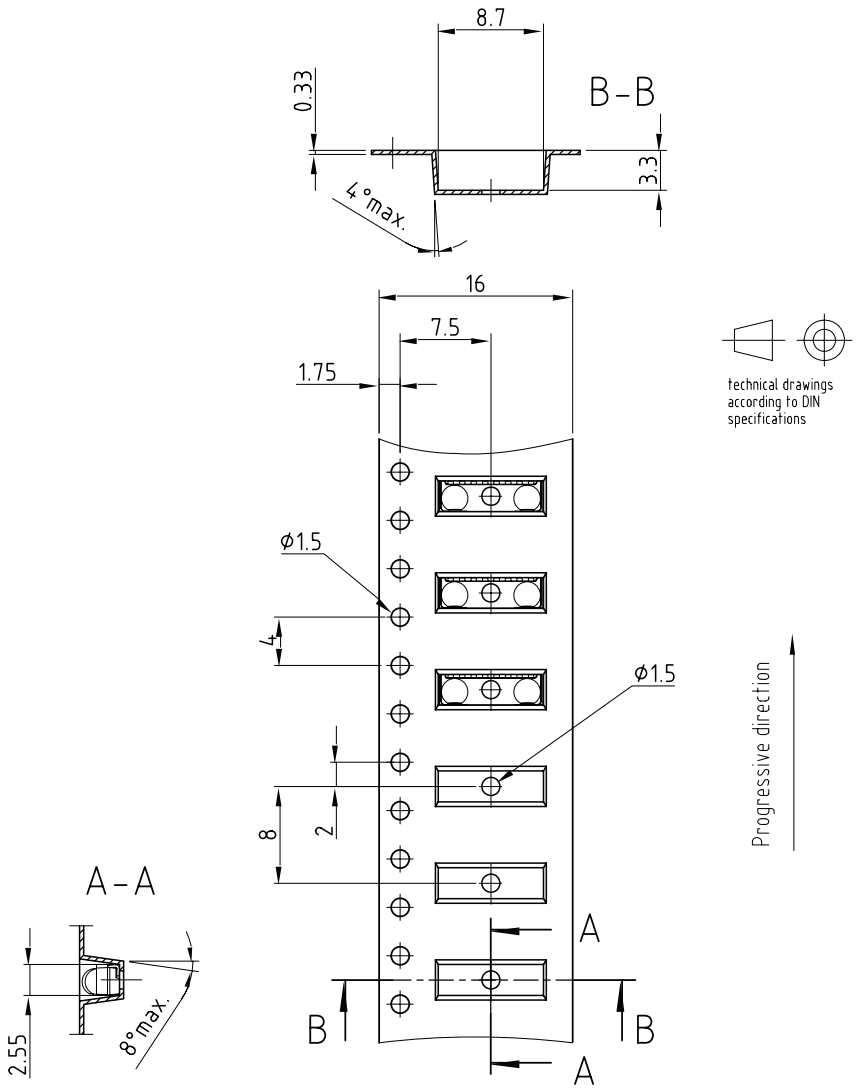

Drawing-No.: 9.700-5280.01-4
Issue: 1; 03.11.03
19855

Fig. 7 - Tape Drawing, TFDU4301 for Top View Mounting

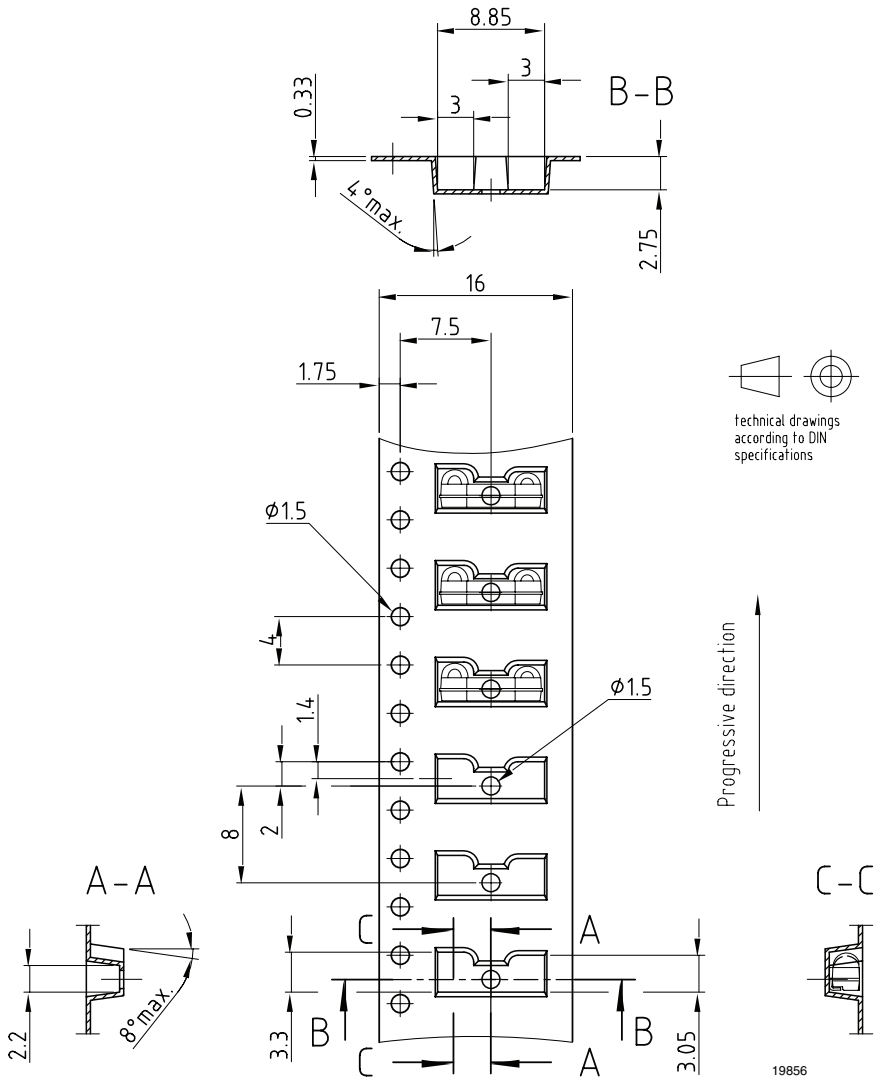

Drawing-No.: 9.700-5279.01-4
Issue: 1; 08.12.04
19856

Fig. 8 - Tape Drawing, TFDU4301 for Side View Mounting

Disclaimer

ALL PRODUCT, PRODUCT SPECIFICATIONS AND DATA ARE SUBJECT TO CHANGE WITHOUT NOTICE TO IMPROVE RELIABILITY, FUNCTION OR DESIGN OR OTHERWISE.

Vishay Intertechnology, Inc., its affiliates, agents, and employees, and all persons acting on its or their behalf (collectively, "Vishay"), disclaim any and all liability for any errors, inaccuracies or incompleteness contained in any datasheet or in any other disclosure relating to any product.

Vishay makes no warranty, representation or guarantee regarding the suitability of the products for any particular purpose or the continuing production of any product. To the maximum extent permitted by applicable law, Vishay disclaims (i) any and all liability arising out of the application or use of any product, (ii) any and all liability, including without limitation special, consequential or incidental damages, and (iii) any and all implied warranties, including warranties of fitness for particular purpose, non-infringement and merchantability.

Statements regarding the suitability of products for certain types of applications are based on Vishay's knowledge of typical requirements that are often placed on Vishay products in generic applications. Such statements are not binding statements about the suitability of products for a particular application. It is the customer's responsibility to validate that a particular product with the properties described in the product specification is suitable for use in a particular application. Parameters provided in datasheets and / or specifications may vary in different applications and performance may vary over time. All operating parameters, including typical parameters, must be validated for each customer application by the customer's technical experts. Product specifications do not expand or otherwise modify Vishay's terms and conditions of purchase, including but not limited to the warranty expressed therein.

Except as expressly indicated in writing, Vishay products are not designed for use in medical, life-saving, or life-sustaining applications or for any other application in which the failure of the Vishay product could result in personal injury or death. Customers using or selling Vishay products not expressly indicated for use in such applications do so at their own risk. Please contact authorized Vishay personnel to obtain written terms and conditions regarding products designed for such applications.

No license, express or implied, by estoppel or otherwise, to any intellectual property rights is granted by this document or by any conduct of Vishay. Product names and markings noted herein may be trademarks of their respective owners.

© 2017 VISHAY INTERTECHNOLOGY, INC. ALL RIGHTS RESERVED