LMK04906 Ultralow Noise Clock Jitter Cleaner and Multiplier With 6 Programmable Outputs

1 Features

- Ultralow RMS Jitter Performance
  - 100-fs RMS Jitter (12 kHz to 20 MHz)
  - 123-fs RMS Jitter (100 Hz to 20 MHz)
- Dual Loop PLLatinum™ PLL Architecture
  - PLL1
    - Integrated Low-Noise Crystal Oscillator Circuit
    - Holdover Mode when Input Clocks are Lost
      - Automatic or Manual Triggering/Recovery
  - PLL2
    - Normalized [1 Hz] PLL Noise Floor of –227 dBc/Hz
    - Phase Detector Rate up to 155 MHz
    - OSCin Frequency-doubler
    - Integrated Low-Noise VCO
- 3 Redundant Input Clocks with LOS
  - Automatic and Manual Switch-Over Modes
- 50% Duty Cycle Output Divides, 1 to 1045 (Even and Odd)
- LVPECL, LVDS, or LVCMOS Programmable Outputs
- Precision Digital Delay, Fixed or Dynamically Adjustable
- 25-ps Step Analog Delay Control.
- 6 Differential Outputs. Up to 12 Single Ended.
  - Up to 5 VCXO/Crystal Buffered Outputs
- Clock Rates of up to 2600 MHz
- 0-Delay Mode
- Three Default Clock Outputs at Power Up
- Multi-mode: Dual PLL, Single PLL, and Clock Distribution
- Industrial Temperature Range: –40 to 85 °C
- 3.15-V to 3.45-V Operation
- Package: 64-Pin WQFN (9 mm × 9 mm × 0.8 mm)

System Application Diagram

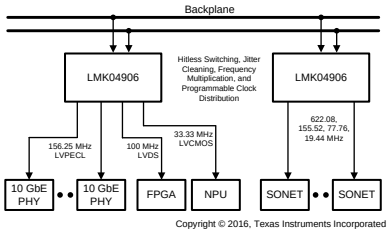

Copyright © 2016, Texas Instruments Incorporated

2 Applications

- 10G, 40G, and 100G OTN Line Cards
- SONET/SDH OC-48/STM-16 and OC-192/STM-64 Line Cards
- GbE/10GbE, 1/2/4/8/10GFC Line Cards
- ITU G.709 and Custom FEC Line Cards
- Synchronous Ethernet
- Optical Modules
- DSLAM/MSANs
- Test and Measurement
- Broadcast Video
- Wireless Basestations
- Data Converter Clocking
- Microwave ODU and IDUs for Wireless Backhaul

3 Description

The LMK04906 is the industry's highest performance clock jitter attenuator with superior clock jitter cleaning, generation, and distribution with advanced features to meet high performance timing application needs.

The LMK04906 accepts 3 clock inputs ranging from 1 kHz to 500 MHz and generates 6 unique clock output frequencies ranging from 284 kHz to 2.6 GHz. The LMK04906 can also buffer a crystal or VCXO to generate a 7th unique clock frequency.

The device provides virtually all frequency translation combinations required for SONET, Ethernet, Fibre Channel and multi-mode Wireless Base Stations.

The LMK04906 input clock frequency and clock multiplication ratio are programmable through a SPI interface.

Device Information(1)

PART NUMBER	VCO FREQUENCY	REFERENCE INPUTS
LMK04906	2370 to 2600 MHz	3

(1) For all available packages, see the orderable addendum at the end of the data sheet.

Simplified LMK04906 Block Diagram

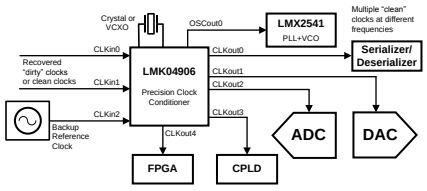

Copyright © 2016, Texas Instruments Incorporated

An IMPORTANT NOTICE at the end of this data sheet addresses availability, warranty, changes, use in safety-critical applications, intellectual property matters and other important disclaimers. PRODUCTION DATA.

Table of Contents

1 Features ... 1
2 Applications ... 1
3 Description ... 1
4 Revision History ... 2
5 Pin Configuration and Functions ... 3
6 Specifications ... 5
6.1 Absolute Maximum Ratings ... 5
6.2 ESD Ratings ... 5
6.3 Recommended Operating Conditions ... 5
6.4 Thermal Information ... 5
6.5 Electrical Characteristics ... 6
6.6 Timing Requirements ... 12
6.7 Typical Characteristics ... 13
7 Parameter Measurement Information ... 14
7.1 Charge Pump Current Specification Definitions ... 14
7.2 Differential Voltage Measurement Terminology ... 15
8 Detailed Description ... 17
8.1 Overview ... 17
8.2 Functional Block Diagram ... 21
8.3 Feature Description ... 21
8.4 Device Functional Modes ... 42
8.5 Programming ... 45
8.6 Register Maps ... 48
9 Application and Implementation ... 85
9.1 Application Information ... 85
9.2 Typical Application ... 101
9.3 System Examples ... 108
9.4 Do's and Don'ts ... 111
10 Power Supply Recommendations ... 112
10.1 Pin Connection Recommendations ... 112
10.2 Current Consumption and Power Dissipation Calculations ... 113
11 Layout ... 115
11.1 Layout Guidelines ... 115
11.2 Layout Example ... 117
12 Device and Documentation Support ... 118
12.1 Device Support ... 118
12.2 Receiving Notification of Documentation Updates ... 118
12.3 Community Resource ... 118
12.4 Trademarks ... 118
12.5 Electrostatic Discharge Caution ... 118
12.6 Glossary ... 118
13 Mechanical, Packaging, and Orderable Information ... 118

4 Revision History

NOTE: Page numbers for previous revisions may differ from page numbers in the current version.

Changes from Revision E (August 2016) to Revision F — **Page**

- Changed From: CLKout3_PD = 0 To: CLKout2_PD = 0 in Table 7 ... 37
- Changed From: CLKout3_PD = 0 To: CLKout2_PD = 0 in Table 9 ... 40

Changes from Revision D (May 2013) to Revision E — **Page**

- Changed 750 to 500 ... 1
- Changed 2.26 MHz to 284 kHz ... 1
- Added *ESD Ratings* table, *Feature Description* section, *Device Functional Modes*, *Application and Implementation* section, *Power Supply Recommendations* section, *Layout* section, *Device and Documentation Support* section, and *Mechanical, Packaging, and Orderable Information* section ... 1
- Changed *Clock Switch Event With Holdover* section. ... 26
- Deleted *Clock Switch Event without Holdover* section. ... 26
- Changed 5 cycles to 5.5 cycles ... 38
- Changed 5 cycles to 5.5 cycles ... 41
- Added (Auto modes only). ... 70
- Changed equation ... 94

Changes from Revision C (May 2013) to Revision D — **Page**

- Changed layout of National Semiconductor Data Sheet to TI format. ... 115

Copyright © 2012–2017, Texas Instruments Incorporated

5 Pin Configuration and Functions

NKD Package
64-Pin WQFN With Exposed Pad
Top View

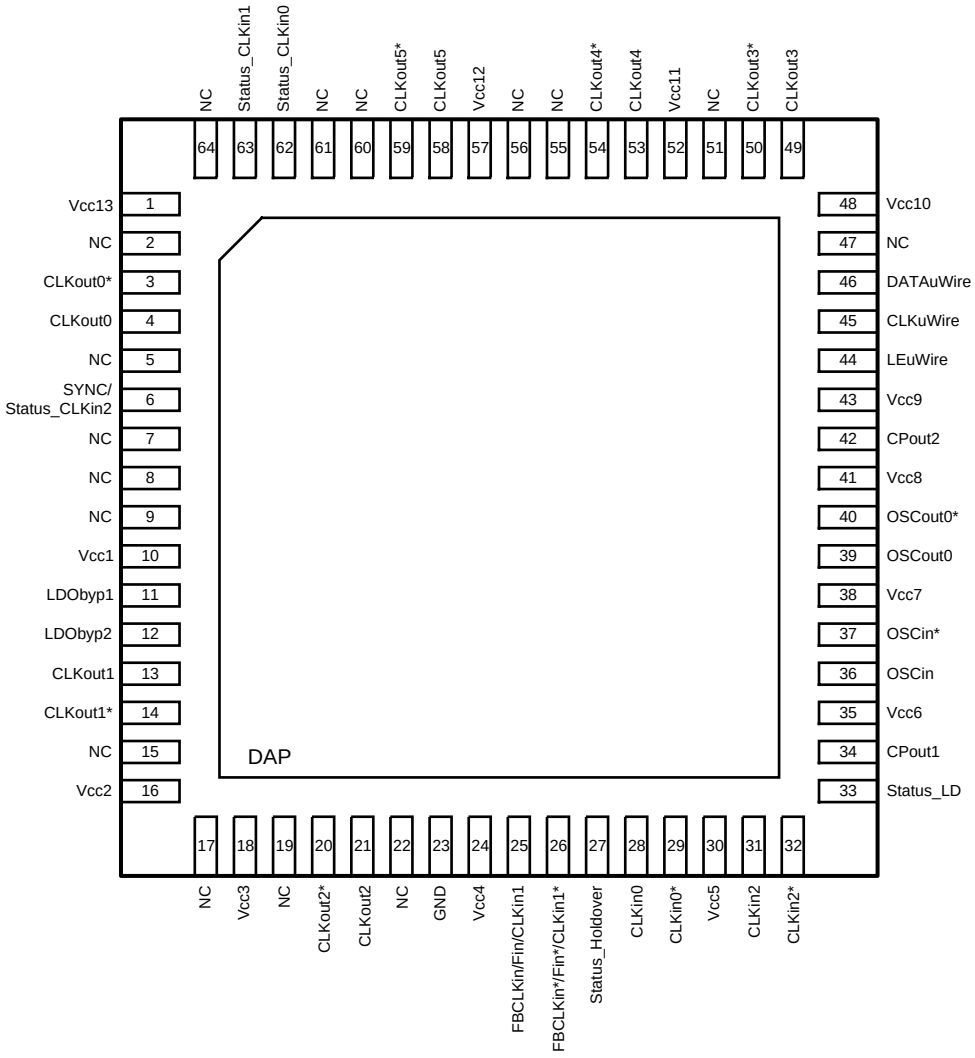

Pin Functions

PIN		I/O	TYPE	DESCRIPTION(1)
NAME	NO.			
Vcc13	1	—	PWR	Power Supply for CLKou0
NC	2, 5, 7, 8, 9, 15, 17, 19 22, 47, 51, 55, 56, 60, 61, 64	—	No Connect	These pins must be left floating.
CLKout0*, CLKout0	3, 4	O	Programmable	Clock output 0.
SYNC / Status_CLKin2	6	I/O	Programmable	CLKout Synchronization input or CLKin2 Status output.
Vcc1	10	—	PWR	Power supply for VCO LDO.
LDObyp1	11	—	ANLG	LDO Bypass, bypassed to ground with 10 µF capacitor.

(1) See *Application and Implementation* section for recommended connections.

Copyright © 2012–2017, Texas Instruments Incorporated

Pin Functions (continued)

PIN		I/O	TYPE	DESCRIPTION(1)
NAME	NO.			
LDObyp2	12	—	ANLG	LDO Bypass, bypassed to ground with a 0.1 µF capacitor.
CLKout1, CLKout1*	13, 14	O	Programmable	Clock output 1.
Vcc2	16	—	PWR	Power supply for CLKout1.
Vcc3	18	—	PWR	Power supply for CLKout2
CLKout2*, CLKout2	20, 21	O	Programmable	Clock output 2
GND	23	—	PWR	Ground
Vcc4	24	—	PWR	Power supply for digital.
CLKin1, CLKin1*	25, 26	I	ANLG	Reference Clock Input Port 1 for PLL1. AC or DC Coupled.
FBCLKin, FBCLKin*				Feedback input for external clock feedback input (0-delay mode). AC or DC Coupled.
Fin/Fin*				External VCO input (External VCO mode). AC or DC Coupled.
Status_Holdover	27	I/O	Programmable	Programmable status pin, default readback output. Programmable to holdover mode indicator. Other options available by programming.
CLKin0, CLKin0*	28, 29	I	ANLG	Reference Clock Input Port 0 for PLL1. AC or DC Coupled.
Vcc5	30	—	PWR	Power supply for clock inputs.
CLKin2, CLKin2*	31, 32	I	ANLG	Reference Clock Input Port 2 for PLL1, AC or DC Coupled.
Status_LD	33	I/O	Programmable	Programmable status pin, default lock detect for PLL1 and PLL2. Other options available by programming.
CPout1	34	O	ANLG	Charge pump 1 output.
Vcc6	35	—	PWR	Power supply for PLL1, charge pump 1.
OSCin, OSCin*	36, 37	I	ANLG	Feedback to PLL1, Reference input to PLL2. AC Coupled.
Vcc7	38	—	PWR	Power supply for OSCin port.
OSCout0, OSCout0*	39, 40	O	Programmable	Buffered output 0 of OSCin port.
Vcc8	41	—	PWR	Power supply for PLL2, charge pump 2.
CPout2	42	O	ANLG	Charge pump 2 output.
Vcc9	43	—	PWR	Power supply for PLL2.
LEuWire	44	I	CMOS	MICROWIRE Latch Enable Input.
CLKuWire	45	I	CMOS	MICROWIRE Clock Input.
DATAuWire	46	I	CMOS	MICROWIRE Data Input.
Vcc10	48	—	PWR	Power supply for CLKout3.
CLKout3, CLKout3*	49, 50	O	Programmable	Clock output 3.
Vcc11	52	—	PWR	Power supply for CLKout4.
CLKout4, CLKout4*	53, 54	O	Programmable	Clock output 4.
Vcc12	57	—	PWR	Power supply for CLKout5.
CLKout5, CLKout5*	58, 59	O	Programmable	Clock output 5.
Status_CLKin0	62	I/O	Programmable	Programmable status pin. Default is input for pin control of PLL1 reference clock selection. CLKin0 LOS status and other options available by programming.
Status_CLKin1	63	I/O	Programmable	Programmable status pin. Default is input for pin control of PLL1 reference clock selection. CLKin1 LOS status and other options available by programming.
DAP	DAP	—	GND	DIE ATTACH PAD, connect to GND.

Copyright © 2012–2017, Texas Instruments Incorporated

6 Specifications

6.1 Absolute Maximum Ratings

over operating free-air temperature range (unless otherwise noted)(1)(2)

		MIN	MAX	UNIT
V_{CC}	Supply voltage (3)	–0.3	3.6	V
V_{IN}	Input voltage	–0.3	(V_{CC} + 0.3)	V
I_{IN}	Differential input current (CLKinX/X*, OSCin/OSCin*, FBCLKin/FBCLKin*, Fin/Fin*)		±5	mA
MSL	Moisture sensitivity level		3	
T_J	Junction temperature		150	°C
T_{stg}	Storage temperature	–65	150	°C

(1) Stresses beyond those listed under *Absolute Maximum Ratings* may cause permanent damage to the device. These are stress ratings only, which do not imply functional operation of the device at these or any other conditions beyond those indicated under *Recommended Operating Conditions*. Exposure to absolute-maximum-rated conditions for extended periods may affect device reliability.
(2) If Military/Aerospace specified devices are required, please contact the Texas Instruments Sales Office/Distributors for availability and specifications.
(3) Never to exceed 3.6 V.

6.2 ESD Ratings

			VALUE	UNIT
$V_{(ESD)}$	Electrostatic discharge	Human-body model (HBM), per ANSI/ESDA/JEDEC JS-001(1)	±2000	V
		Charged-device model (CDM), per JEDEC specification JESD22-C101(2)	±750	
		Machine model (MM)	±150	

(1) JEDEC document JEP155 states that 500-V HBM allows safe manufacturing with a standard ESD control process.
(2) JEDEC document JEP157 states that 250-V CDM allows safe manufacturing with a standard ESD control process.

6.3 Recommended Operating Conditions

			MIN	NOM	MAX	UNIT
T_J	Junction temperature				125	°C
T_A	Ambient temperature	V_{CC} = 3.3 V	–40	25	85	°C
V_{CC}	Supply voltage		3.15	3.3	3.45	V

6.4 Thermal Information

THERMAL METRIC(1)		LMK04906 NKD (WQFN) 64 PINS	UNIT
$R_{\theta JA}$	Junction-to-ambient thermal resistance	25.2	°C/W
$R_{\theta JC(top)}$	Junction-to-case (top) thermal resistance	6.9	°C/W
$R_{\theta JB}$	Junction-to-board thermal resistance	4	°C/W
ψ_{JT}	Junction-to-top characterization parameter	0.1	°C/W
ψ_{JB}	Junction-to-board characterization parameter	4	°C/W
$R_{\theta JC(bot)}$	Junction-to-case (bottom) thermal resistance	0.8	°C/W

(1) For more information about traditional and new thermal metrics, see the *Semiconductor and IC Package Thermal Metrics* application report.

Copyright © 2012–2017, Texas Instruments Incorporated

6.5 Electrical Characteristics

(3.15 V ≤ V_{CC} ≤ 3.45 V, -40 °C ≤ T_A ≤ 85 °C. Typical values represent most likely parametric norms at V_{CC} = 3.3 V, T_A = 25 °C, at the *Recommended Operating Conditions* at the time of product characterization and are not ensured.)

PARAMETER		TEST CONDITIONS	MIN	TYP	MAX	UNIT
CURRENT CONSUMPTION						
I_{CC_PD}	Power Down Supply Current			1	3	mA
I_{CC_CLKS}	Supply Current with all clocks enabled (1)	All clock delays disabled, CLKoutX_DIV = 1045, CLKoutX_TYPE = 1 (LVDS), PLL1 and PLL2 locked.		410	470	mA
CLKin0/0*, CLKin1/1*, and CLKin2/2* INPUT CLOCK SPECIFICATIONS						
f_{CLKin}	Clock Input Frequency (2)		0.001		500	MHz
$SLEW_{CLKin}$	Clock Input Slew Rate (3)	20% to 80%	0.15	0.5		V/ns
V_{ID}CLKin	Clock Input Differential Input Voltage (4) Figure 4	AC coupled CLKinX_BUF_TYPE = 0 (Bipolar)	0.25		1.55	|V|
V_{SS}CLKin			0.5		3.1	Vpp
V_{ID}CLKin		AC coupled CLKinX_BUF_TYPE = 1 (MOS)	0.25		1.55	|V|
V_{SS}CLKin			0.5		3.1	Vpp
V_{CLKin}	Clock Input Single-ended Input Voltage (3)	AC coupled to CLKinX; CLKinX* AC coupled to Ground CLKinX_BUF_TYPE = 0 (Bipolar)	0.25		2.4	Vpp
		AC coupled to CLKinX; CLKinX* AC coupled to Ground CLKinX_BUF_TYPE = 1 (MOS)	0.25		2.4	Vpp
$V_{CLKin0\text{-}offset}$	DC offset voltage between CLKin0/CLKin0* CLKin0* - CLKin0	Each pin AC coupled CLKin0_BUF_TYPE = 0 (Bipolar)		20		mV
$V_{CLKin1\text{-}offset}$	DC offset voltage between CLKin1/CLKin1* CLKin1* - CLKin1			0		mV
$V_{CLKin2\text{-}offset}$	DC offset voltage between CLKin2/CLKin2* CLKin2* - CLKin2			20		mV
$V_{CLKinX\text{-}offset}$	DC offset voltage between CLKinX/CLKinX* CLKinX* - CLKinX	Each pin AC coupled CLKinX_BUF_TYPE = 1 (MOS)		55		mV
$V_{CLKin\text{-}}$ V_{IH}	High input voltage	DC coupled to CLKinX; CLKinX* AC coupled to Ground CLKinX_BUF_TYPE = 1 (MOS)	2		V_{CC}	V
$V_{CLKin\text{-}}$ V_{IL}	Low input voltage		0		0.4	V
FBCLKin/FBCLKin* and Fin/Fin* INPUT SPECIFICATIONS						
$f_{FBCLKin}$	Clock Input Frequency (3)	AC coupled (CLKinX_BUF_TYPE = 0) MODE = 2 or 8; FEEDBACK_MUX = 6	0.001		1000	MHz
f_{Fin}	Clock Input Frequency (3)	AC coupled (CLKinX_BUF_TYPE = 0) MODE = 3 or 11	0.001		3100	MHz
$V_{FBCLKin/Fin}$	Single Ended Clock Input Voltage (3)	AC coupled; (CLKinX_BUF_TYPE = 0)	0.25		2	Vpp
$SLEW_{FBCLKin/Fin}$	Slew Rate on CLKin (3)	AC coupled; 20% to 80%; (CLKinX_BUF_TYPE = 0)	0.15	0.5		V/ns

(1) Load conditions for output clocks: LVDS: 100 Ω differential. See *Current Consumption and Power Dissipation Calculations* for I_{CC} for specific part configuration and how to calculate I_{CC} for a specific design.
(2) CLKin0, CLKin1, and CLKin2 maximum is specified by characterization, production tested at 200 MHz.
(3) Specified by characterization.
(4) See *Differential Voltage Measurement Terminology* for definition of V_{ID} and V_{OD} voltages.

Copyright © 2012–2017, Texas Instruments Incorporated

Electrical Characteristics (continued)

(3.15 V ≤ V_{CC} ≤ 3.45 V, -40 °C ≤ T_A ≤ 85 °C. Typical values represent most likely parametric norms at V_{CC} = 3.3 V, T_A = 25 °C, at the *Recommended Operating Conditions* at the time of product characterization and are not ensured.)

PARAMETER		TEST CONDITIONS	MIN	TYP	MAX	UNIT
PLL1 SPECIFICATIONS						
f_{PD1}	PLL1 Phase Detector Frequency				40	MHz
I_{CPout1}SOURCE	PLL1 Charge Pump Source Current (5)	V_{CPout1} = V_{CC}/2, PLL1_CP_GAIN = 0		100		µA
		V_{CPout1} = V_{CC}/2, PLL1_CP_GAIN = 1		200		
		V_{CPout1} = V_{CC}/2, PLL1_CP_GAIN = 2		400		
		V_{CPout1} = V_{CC}/2, PLL1_CP_GAIN = 3		1600		
I_{CPout1}SINK	PLL1 Charge Pump Sink Current (5)	V_{CPout1}=V_{CC}/2, PLL1_CP_GAIN = 0		–100		µA
		V_{CPout1}=V_{CC}/2, PLL1_CP_GAIN = 1		–200		
		V_{CPout1}=V_{CC}/2, PLL1_CP_GAIN = 2		–400		
		V_{CPout1}=V_{CC}/2, PLL1_CP_GAIN = 3		–1600		
I_{CPout1}%MIS	Charge Pump Sink / Source Mismatch	V_{CPout1} = V_{CC}/2, T = 25 °C		3%	10	
$I_{CPout1}V_{TUNE}$	Magnitude of Charge Pump Current Variation vs. Charge Pump Voltage	0.5 V < V_{CPout1} < V_{CC} - 0.5 V T_A = 25 °C		4%		
I_{CPout1}%TEMP	Charge Pump Current vs. Temperature Variation			4%		
I_{CPout1} TRI	Charge Pump TRI-STATELeakage Current	0.5 V < V_{CPout} < V_{CC} - 0.5 V			5	nA
PN10kHz	PLL 1/f Noise at 10-kHz offset. Normalized to 1-GHz Output Frequency	PLL1_CP_GAIN = 400 µA		–117		dBc/Hz
		PLL1_CP_GAIN = 1600 µA		–118		
PN1Hz	Normalized Phase Noise Contribution	PLL1_CP_GAIN = 400 µA		–221.5		dBc/Hz
		PLL1_CP_GAIN = 1600 µA		–223		
PLL2 REFERENCE INPUT (OSCin) SPECIFICATIONS						
f_{OSCin}	PLL2 Reference Input (6)				500	MHz
$SLEW_{OSCin}$	PLL2 Reference Clock minimum slew rate on OSCin (3)	20% to 80%	0.15	0.5		V/ns
V_{OSCin}	Input Voltage for OSCin or OSCin* (3)	AC coupled; Single-ended (Unused pin AC coupled to GND)	0.2		2.4	Vpp
V_{ID}OSCin	Differential voltage swing Figure 4	AC coupled	0.2		1.55	|V|
V_{SS}OSCin			0.4		3.1	Vpp
$V_{OSCin-offset}$	DC offset voltage between OSCin/OSCin* OSCinX* - OSCinX	Each pin AC coupled		20		mV
$f_{doubler_max}$	Doubler input frequency (3)	EN_PLL2_REF_2X = 1; OSCin Duty Cycle 40% to 60%			155	MHz
CRYSTAL OSCILLATOR MODE SPECIFICATIONS						
f_{XTAL}	Crystal frequency range (3)	R_{ESR} < 40 Ω	6		20.5	MHz
P_{XTAL}	Crystal power dissipation (7)	Vectron VXB1 crystal, 20.48 MHz, R_{ESR} < 40 Ω XTAL_LVL = 0		100		µW
C_{IN}	Input capacitance of LMK04906 OSCin port	–40 to +85 °C		6		pF

(5) This parameter is programmable
(6) F_{OSCin} maximum frequency specified by characterization. Production tested at 200 MHz.
(7) See *Optional Crystal Oscillator Implementation (OSCin/OSCin*)*

Copyright © 2012–2017, Texas Instruments Incorporated

Electrical Characteristics (continued)

(3.15 V ≤ V_{CC} ≤ 3.45 V, -40 °C ≤ T_A ≤ 85 °C. Typical values represent most likely parametric norms at V_{CC} = 3.3 V, T_A = 25 °C, at the *Recommended Operating Conditions* at the time of product characterization and are not ensured.)

PARAMETER		TEST CONDITIONS	MIN	TYP	MAX	UNIT
PLL2 PHASE DETECTOR AND CHARGE PUMP SPECIFICATIONS						
f_{PD2}	Phase detector frequency				155	MHz
I_{CPout}SOURCE	PLL2 charge pump source current (5)	V_{CPout2}=V_{CC}/2, PLL2_CP_GAIN = 0		100		µA
		V_{CPout2}=V_{CC}/2, PLL2_CP_GAIN = 1		400		
		V_{CPout2}=V_{CC}/2, PLL2_CP_GAIN = 2		1600		
		V_{CPout2}=V_{CC}/2, PLL2_CP_GAIN = 3		3200		
I_{CPout}SINK	PLL2 charge pump sink current (5)	V_{CPout2}=V_{CC}/2, PLL2_CP_GAIN = 0		–100		µA
		V_{CPout2}=V_{CC}/2, PLL2_CP_GAIN = 1		–400		
		V_{CPout2}=V_{CC}/2, PLL2_CP_GAIN = 2		–1600		
		V_{CPout2}=V_{CC}/2, PLL2_CP_GAIN = 3		–3200		
I_{CPout2}%MIS	Charge pump sink/source mismatch	V_{CPout2}=V_{CC}/2, T_A = 25 °C		3%	10%	
$I_{CPout2}V_{TUNE}$	Magnitude of charge pump current vs charge pump voltage variation	0.5 V < V_{CPout2} < V_{CC} - 0.5 V T_A = 25 °C		4%		
I_{CPout2}%TEMP	Charge pump current vs temperature variation			4%		
I_{CPout2}TRI	Charge pump leakage	0.5 V < V_{CPout2} < V_{CC} – 0.5 V			10	nA
PN10kHz	PLL 1/f noise at 10-kHz offset (8). Normalized to 1-GHz output frequency	PLL2_CP_GAIN = 400 µA		–118		dBc/Hz
		PLL2_CP_GAIN = 3200 µA		–121		
PN1Hz	Normalized phase noise contribution (9)	PLL2_CP_GAIN = 400 µA		–222.5		dBc/Hz
		PLL2_CP_GAIN = 3200 µA		–227		
INTERNAL VCO SPECIFICATIONS						
f_{VCO}	VCO tuning range	LMK04906	2370		2600	MHz
K_{VCO}	Fine tuning sensitivity (The range displayed in the typical column indicates the lower sensitivity is typical at the lower end of the tuning range, and the higher tuning sensitivity is typical at the higher end of the tuning range).	LMK04906		16 to 21		MHz/V
$\|\Delta T_{CL}\|$	Allowable temperature drift for continuous lock (10) (3)	After programming R30 for lock, no changes to output configuration are permitted to guarantee continuous lock			125	°C

(8) A specification in modeling PLL in-band phase noise is the 1/f flicker noise, $L_{PLL_flicker}(f)$, which is dominant close to the carrier. Flicker noise has a 10 dB/decade slope. PN10kHz is normalized to a 10 kHz offset and a 1 GHz carrier frequency. PN10kHz = $L_{PLL_flicker}$(10 kHz) - 20log(Fout / 1 GHz), where $L_{PLL_flicker}(f)$ is the single side band phase noise of only the flicker noise's contribution to total noise, L(f). To measure $L_{PLL_flicker}(f)$ it is important to be on the 10 dB/decade slope close to the carrier. A high compare frequency and a clean crystal are important to isolating this noise source from the total phase noise, L(f). $L_{PLL_flicker}(f)$ can be masked by the reference oscillator performance if a low power or noisy source is used. The total PLL in-band phase noise performance is the sum of $L_{PLL_flicker}(f)$ and $L_{PLL_flat}(f)$.

(9) A specification modeling PLL in-band phase noise. The normalized phase noise contribution of the PLL, $L_{PLL_flat}(f)$, is defined as: PN1HZ=$L_{PLL_flat}(f)$ - 20log(N) - 10log(f_{PDX}). $L_{PLL_flat}(f)$ is the single side band phase noise measured at an offset frequency, f, in a 1 Hz bandwidth and f_{PDX} is the phase detector frequency of the synthesizer. $L_{PLL_flat}(f)$ contributes to the total noise, L(f).

(10) Maximum Allowable Temperature Drift for Continuous Lock is how far the temperature can drift in either direction from the value it was at the time that the R30 register was last programmed, and still have the part stay in lock. The action of programming the R30 register, even to the same value, activates a frequency calibration routine. This implies the part will work over the entire frequency range, but if the temperature drifts more than the maximum allowable drift for continuous lock, then it will be necessary to reload the R30 register to ensure it stays in lock. Regardless of what temperature the part was initially programmed at, the temperature can never drift outside the frequency range of -40 °C to 85 °C without violating specifications.

Copyright © 2012–2017, Texas Instruments Incorporated

Electrical Characteristics (continued)

(3.15 V ≤ V_{CC} ≤ 3.45 V, -40 °C ≤ T_A ≤ 85 °C. Typical values represent most likely parametric norms at V_{CC} = 3.3 V, T_A = 25 °C, at the *Recommended Operating Conditions* at the time of product characterization and are not ensured.)

PARAMETER		TEST CONDITIONS	MIN	TYP	MAX	UNIT
CLKout CLOSED LOOP JITTER SPECIFICATIONS USING A COMMERCIAL QUALITY VCXO (11)						
$L(f)_{CLKout}$	LMK04906 f_{CLKout} = 245.76 MHz SSB phase noise Measured at clock outputs Value is average for all output types (12)	Offset = 1 kHz		–122.5		dBc/Hz
		Offset = 10 kHz		–132.9		
		Offset = 100 kHz		–135.2		
		Offset = 800 kHz		–143.9		
		Offset = 10 MHz; LVDS		–156		
		Offset = 10 MHz; LVPECL 1600 mVpp		–157.5		
		Offset = 10 MHz; LVCMOS		–157.1		
J_{CLKout} LVDS/LVPECL/ LVCMOS	LMK04906 (12) f_{CLKout} = 245.76 MHz Integrated RMS jitter	BW = 12 kHz to 20 MHz		115		fs rms
		BW = 100 Hz to 20 MHz		123		
CLKout CLOSED LOOP JITTER SPECIFICATIONS USING THE INTEGRATED LOW NOISE CRYSTAL OSCILLATOR CIRCUIT (13)						
	LMK04906 f_{CLKout} = 245.76 MHz Integrated RMS jitter	BW = 12 kHz to 20 MHz XTAL_LVL = 3		192		
		BW = 100 Hz to 20 MHz XTAL_LVL = 3		450		
DEFAULT POWER ON RESET CLOCK OUTPUT FREQUENCY						
$f_{CLKout-startup}$	Default output clock frequency at device power on (14)	CLKout4, LVDS, LMK04906	90	98	110	MHz
CLOCK SKEW AND DELAY						
$\|T_{SKEW}\|$	Maximum CLKoutX to CLKoutY (15) (3)	LVDS-to-LVDS, T = 25 °C, F_{CLK} = 800 MHz, R_L = 100 Ω AC coupled		30		ps
		LVPECL-to-LVPECL, T = 25 °C, F_{CLK} = 800 MHz, R_L = 100 Ω emitter resistors = 240 Ω to GND AC coupled		30		
	Maximum skew between any two LVCMOS outputs, same CLKout or different CLKout (15) (3)	R_L = 50 Ω, C_L = 5 pF, T = 25 °C, F_{CLK} = 100 MHz. (15)		100		
$MixedT_{SKEW}$	LVDS or LVPECL to LVCMOS	Same device, T = 25 °C, 250 MHz		750		ps
$td_{0-DELAY}$	CLKin to CLKoutX delay (15)	MODE = 2 PLL1_R_DLY = 0; PLL1_N_DLY = 0		1850		ps
		MODE = 2 PLL1_R_DLY = 0; PLL1_N_DLY = 0; VCO Frequency = 2949.12 MHz Analog delay select = 0; Feedback clock digital delay = 11; Feedback clock half step = 1; Output clock digital delay = 5; Output clock half step = 0;		0		

(11) VCXO used is a 122.88 MHz Crystek CVHD-950-122.880.
(12) f_{VCO} = 2457.6 MHz, PLL1 parameters: EN_PLL2_REF_2X = 1, PLL2_R = 2, F_{PD1} = 1.024 MHz, I_{CP1} = 100 µA, loop bandwidth = 10 Hz. A 122.88 MHz Crystek CVHD-950–122.880. PLL2 parameters: PLL2_R = 1, F_{PD2} = 122.88 MHz, I_{CP2} = 3200 µA, C1 = 47 pF, C2 = 3.9 nF, R2 = 620 Ω, PLL2_C3_LF = 0, PLL2_R3_LF = 0, PLL2_C4_LF = 0, PLL2_R4_LF = 0, CLKoutX_DIV = 10, and CLKoutX_ADLY_SEL = 0.
(13) Crystal used is a 20.48 MHz Vectron VXB1-1150-20M480 and Skyworks varactor diode, SMV-1249-074LF.
(14) CLKout3 and OSCout0 also oscillate at start-up at the frequency of the VCXO attached to OSCin port.
(15) Equal loading and identical clock output configuration on each clock output is required for specification to be valid. Specification not valid for delay mode.

Copyright © 2012–2017, Texas Instruments Incorporated

Electrical Characteristics (continued)

(3.15 V ≤ V_{CC} ≤ 3.45 V, -40 °C ≤ T_A ≤ 85 °C. Typical values represent most likely parametric norms at V_{CC} = 3.3 V, T_A = 25 °C, at the *Recommended Operating Conditions* at the time of product characterization and are not ensured.)

PARAMETER		TEST CONDITIONS	MIN	TYP	MAX	UNIT
LVDS CLOCK OUTPUTS (CLKoutX), CLKoutX_TYPE = 1						
f_{CLKout}	Maximum frequency (3) (16)	R_L = 100 Ω	1536			MHz
V_{OD}	Differential output voltage Figure 5	T = 25 °C, DC measurement AC coupled to receiver input R = 100 Ω differential termination	250	400	450	|mV|
V_{SS}			500	800	900	mVpp
ΔV_{OD}	Change in Magnitude of V_{OD} for complementary output states		–50		50	mV
V_{OS}	Output offset voltage		1.125	1.25	1.375	V
ΔV_{OS}	Change in V_{OS} for complementary output states				35	|mV|
T_R / T_F	Output rise time	20% to 80%, RL = 100 Ω		200		ps
	Output fall time	80% to 20%, RL = 100 Ω				
I_{SA} I_{SB}	Output short-circuit current: single ended	Single-ended output shorted to GND, T = 25 °C	–24		24	mA
I_{SAB}	Output short-circuit current: differential	Complimentary outputs tied together	–12		12	mA
LVPECL CLOCK OUTPUTS (CLKoutX)						
f_{CLKout}	Maximum frequency (3) (16)		1536			MHz
T_R / T_F	20% to 80% output rise	RL = 100 Ω, emitter resistors = 240 Ω to GND CLKoutX_TYPE = 4 or 5 (1600 or 2000 mVpp)		150		ps
	80% to 20% output fall time					
700-mVpp LVPECL CLOCK OUTPUTS (CLKoutX), CLKoutX_TYPE = 2						
V_{OH}	Output high voltage	T = 25 °C, DC measurement Termination = 50 Ω to V_{CC} - 1.4 V		V_{CC} – 1.03		V
V_{OL}	Output low voltage			V_{CC} – 1.41		V
V_{OD}	Output voltage Figure 5		305	380	440	|mV|
V_{SS}			610	760	880	mVpp
1200-mVpp LVPECL CLOCK OUTPUTS (CLKoutX), CLKoutX_TYPE = 3						
V_{OH}	Output high voltage	T = 25 °C, DC measurement Termination = 50 Ω to V_{CC} – 1.7 V		V_{CC} – 1.07		V
V_{OL}	Output low voltage			V_{CC} – 1.69		V
V_{OD}	Output voltage Figure 5		545	625	705	|mV|
V_{SS}			1090	1250	1410	mVpp
1600-mVpp LVPECL CLOCK OUTPUTS (CLKoutX), CLKoutX_TYPE = 4						
V_{OH}	Output high voltage	T = 25 °C, DC Measurement Termination = 50 Ω to V_{CC} – 2 V		V_{CC} – 1.10		V
V_{OL}	Output low voltage			V_{CC} – 1.97		V
V_{OD}	Output voltage Figure 5		660	870	965	|mV|
V_{SS}			1320	1740	1930	mVpp

(16) See *Typical Characteristics* for output operation performance at higher frequencies than the minimum maximum output frequency.

Copyright © 2012–2017, Texas Instruments Incorporated

Electrical Characteristics (continued)

(3.15 V ≤ V_{CC} ≤ 3.45 V, -40 °C ≤ T_A ≤ 85 °C. Typical values represent most likely parametric norms at V_{CC} = 3.3 V, T_A = 25 °C, at the *Recommended Operating Conditions* at the time of product characterization and are not ensured.)

PARAMETER		TEST CONDITIONS	MIN	TYP	MAX	UNIT
2000-mVpp LVPECL (2VPECL) CLOCK OUTPUTS (CLKoutX), CLKoutX_TYPE = 5						
V_{OH}	Output high voltage	T = 25 °C, DC Measurement Termination = 50 Ω to V_{CC} – 2.3 V		V_{CC} – 1.13		V
V_{OL}	Output low voltage			V_{CC} – 2.20		V
V_{OD}	Output voltage Figure 5		800	1070	1200	|mV|
V_{SS}			1600	2140	2400	mVpp
LVCMOS CLOCK OUTPUTS (CLKoutX)						
f_{CLKout}	Maximum frequency (3) (16)	5-pF Load	250			MHz
V_{OH}	Output high voltage	1-mA Load	V_{CC} – 0.1			V
V_{OL}	Output low voltage	1-mA Load			0.1	V
I_{OH}	Output high current (source)	V_{CC} = 3.3 V, V_O = 1.65 V		28		mA
I_{OL}	Output low current (sink)	V_{CC} = 3.3 V, V_O = 1.65 V		28		mA
$DUTY_{CLK}$	Output duty cycle (3)	V_{CC}/2 to V_{CC}/2, F_{CLK} = 100 MHz, T = 25 °C	45%	50%	55%	
T_R	Output rise time	20% to 80%, RL = 50 Ω, CL = 5 pF		400		ps
T_F	Output fall time	80% to 20%, RL = 50 Ω, CL = 5 pF		400		ps
DIGITAL OUTPUTS (Status_CLKinX, Status_LD, Status_Holdover, SYNC)						
V_{OH}	High-level output voltage	I_{OH} = -500 µA	V_{CC} – 0.4			V
V_{OL}	Low-level output voltage	I_{OL} = 500 µA			0.4	V
DIGITAL INPUTS (Status_CLKinX, SYNC)						
V_{IH}	High-level input voltage		1.6		V_{CC}	V
V_{IL}	Low-level input voltage				0.4	V
I_{IH}	High-level input current V_{IH} = V_{CC}	Status_CLKinX_TYPE = 0 (High Impedance)	–5		5	µA
		Status_CLKinX_TYPE = 1 (Pull-up)	–5		5	
		Status_CLKinX_TYPE = 2 (Pull-down)	10		80	
I_{IL}	Low-level input current V_{IL} = 0 V	Status_CLKinX_TYPE = 0 (High Impedance)	–5		5	µA
		Status_CLKinX_TYPE = 1 (Pull-up)	–40		–5	
		Status_CLKinX_TYPE = 2 (Pulldown)	–5		5	
DIGITAL INPUTS (CLKuWire, DATAuWire, LEuWire)						
V_{IH}	High-level input voltage		1.6		V_{CC}	V
V_{IL}	Low-level input voltage				0.4	V
I_{IH}	High-level input current	V_{IH} = V_{CC}	5		25	µA
I_{IL}	Low-level input current	V_{IL} = 0	–5		5	µA

Copyright © 2012–2017, Texas Instruments Incorporated

6.6 Timing Requirements

			MIN	NOM	MAX	UNIT
T_{ECS}	LE to Clock Set Up Time	See Figure 6	25			ns
T_{DCS}	Data to Clock Set Up Time	See Figure 6	25			ns
T_{CDH}	Clock to Data Hold Time	See Figure 6	8			ns
T_{CWH}	Clock Pulse Width High	See Figure 6	25			ns
T_{CWL}	Clock Pulse Width Low	See Figure 6	25			ns
T_{CES}	Clock to LE Set Up Time	See Figure 6	25			ns
T_{EWH}	LE Pulse Width	See Figure 6	25			ns
T_{CR}	Falling Clock to Readback Time	See Figure 9	25			ns

Copyright © 2012–2017, Texas Instruments Incorporated

6.7 Typical Characteristics

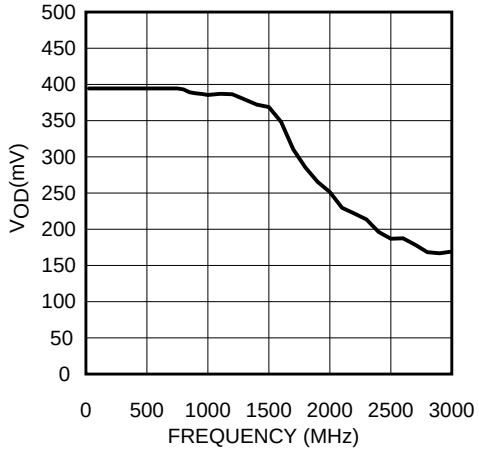

Figure 1. LVDS V_{OD} vs Frequency

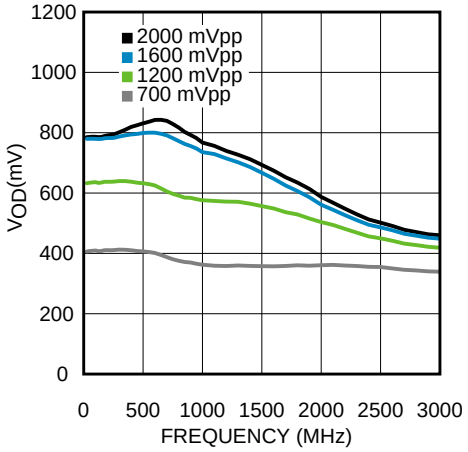

Figure 2. LVPECL With 240-Ω Emitter Resistors V_{OD} vs Frequency

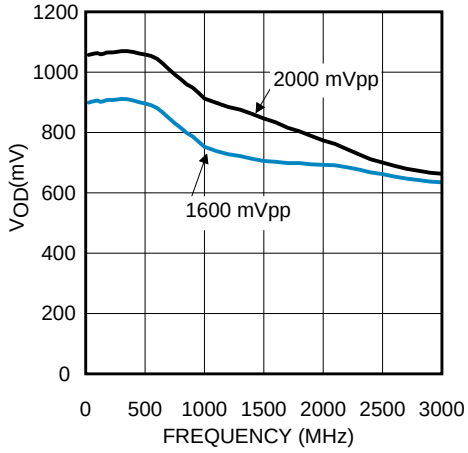

Figure 3. LVPECL With 120-Ω Emitter Resistors V_{OD} vs Frequency

7 Parameter Measurement Information

7.1 Charge Pump Current Specification Definitions

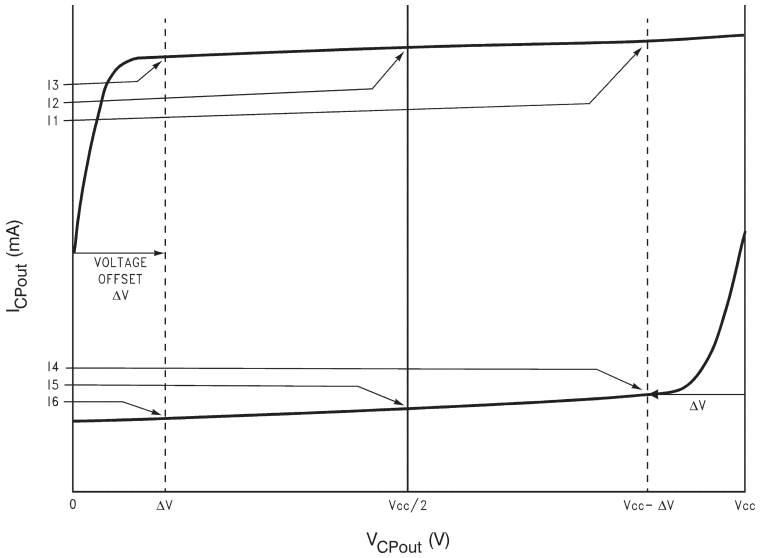

I1 = Charge Pump Sink Current at $V_{CPout} = V_{CC} - \Delta V$

I2 = Charge Pump Sink Current at $V_{CPout} = V_{CC}/2$

I3 = Charge Pump Sink Current at $V_{CPout} = \Delta V$

I4 = Charge Pump Source Current at $V_{CPout} = V_{CC} - \Delta V$

I5 = Charge Pump Source Current at $V_{CPout} = V_{CC}/2$

I6 = Charge Pump Source Current at $V_{CPout} = \Delta V$

ΔV = Voltage offset from the positive and negative supply rails. Defined to be 0.5 V for this device.

7.1.1 Charge Pump Output Current Magnitude Variation Vs. Charge Pump Output Voltage

$$I_{CPout}\ \text{Vs}\ V_{CPout} = \frac{|I1| - |I3|}{|I1| + |I3|} \times 100\%$$

$$= \frac{|I4| - |I6|}{|I4| + |I6|} \times 100\%$$

7.1.2 Charge Pump Sink Current Vs. Charge Pump Output Source Current Mismatch

$$I_{CPout}\ \text{Sink Vs}\ I_{CPout}\ \text{Source} = \frac{|I2| - |I5|}{|I2| + |I5|} \times 100\%$$

Copyright © 2012–2017, Texas Instruments Incorporated

Charge Pump Current Specification Definitions (continued)

7.1.3 Charge Pump Output Current Magnitude Variation vs Temperature

$$I_{CPout}\ Vs\ T_A = \frac{\left|I_2\right|_{T_A} - \left|I_2\right|_{T_A=25°C}}{\left|I_2\right|_{T_A=25°C}} \times 100\%$$

$$= \frac{\left|I_5\right|_{T_A} - \left|I_5\right|_{T_A=25°C}}{\left|I_5\right|_{T_A=25°C}} \times 100\%$$

7.2 Differential Voltage Measurement Terminology

The differential voltage of a differential signal can be described by two different definitions causing confusion when reading datasheets or communicating with other engineers. This section will address the measurement and description of a differential signal so that the reader will be able to understand and discern between the two different definitions when used.

The first definition used to describe a differential signal is the absolute value of the voltage potential between the inverting and non-inverting signal. The symbol for this first measurement is typically V_{ID} or V_{OD} depending on if an input or output voltage is being described.

The second definition used to describe a differential signal is to measure the potential of the non-inverting signal with respect to the inverting signal. The symbol for this second measurement is V_{SS} and is a calculated parameter. Nowhere in the IC does this signal exist with respect to ground, it only exists in reference to its differential pair. V_{SS} can be measured directly by oscilloscopes with floating references, otherwise this value can be calculated as twice the value of V_{OD} as described in the first description.

Figure 4 illustrates the two different definitions side-by-side for inputs and Figure 5 illustrates the two different definitions side-by-side for outputs. The V_{ID} and V_{OD} definitions show V_A and V_B DC levels that the non-inverting and inverting signals toggle between with respect to ground. V_{SS} input and output definitions show that if the inverting signal is considered the voltage potential reference, the non-inverting signal voltage potential is now increasing and decreasing above and below the non-inverting reference. Thus the peak-to-peak voltage of the differential signal can be measured.

V_{ID} and V_{OD} are often defined as volts (V) and V_{SS} is often defined as volts peak-to-peak (V_{PP}).

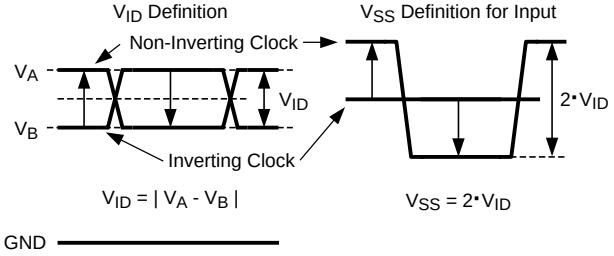

Figure 4. Two Different Definitions for Differential Input Signals

Differential Voltage Measurement Terminology (continued)

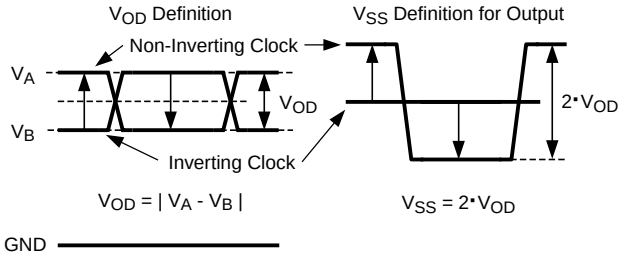

See the *AN-912 Common Data Transmission Parameters and Their Definitions* (SNLA036) application note for more information.

Figure 5. Two Different Definitions for Differential Output Signals

Copyright © 2012–2017, Texas Instruments Incorporated

8 Detailed Description

8.1 Overview

In default mode of operation, dual PLL mode with internal VCO, the Phase Frequency Detector in PLL1 compares the active CLKinX reference divided by CLKinX_PreR_DIV and PLL1 R divider with the external VCXO or crystal attached to the PLL2 OSCin port divided by PLL1 N divider. The external loop filter for PLL1 should be narrow to provide an ultra clean reference clock from the external VCXO or crystal to the OSCin/OSCin* pins for PLL2.

The Phase Frequency Detector in PLL2 compares the external VCXO or crystal attached to the OCSin port divided by the PLL2 R divider with the output of the internal VCO divided by the PLL2 N divider and N2 pre-scaler and optionally the VCO divider. The bandwidth of the external loop filter for PLL2 should be designed to be wide enough to take advantage of the low in-band phase noise of PLL2 and the low high offset phase noise of the internal VCO. The VCO output is also placed on the distribution path for the clock distribution section. The clock distribution consists of 6 dividers and delays which drive 6 outputs. Each clock output allows the user to select a divide value, a digital delay value, and an analog delay. The 6 dividers drive programmable output buffers. Two outputs allow their input signal to be from the OSCin port directly.

When a 0-delay mode is used, a clock output will be passed through the feedback mux to the PLL1 N Divider for synchronization and 0-delay.

When an external VCO mode is used, the Fin port will be used to input an external VCO signal. PLL2 Phase comparison will now be with this signal divided by the PLL2 N divider and N2 pre-scaler. The VCO divider may not be used. One less clock input is available when using an external VCO mode.

When a single PLL mode is used, PLL1 is powered down. OSCin is used as a reference to PLL2.

8.1.1 System Architecture

The dual loop PLL architecture of the LMK04906 provides the lowest jitter performance over the widest range of output frequencies and phase noise integration bandwidths. The first stage PLL (PLL1) is driven by an external reference clock and uses an external VCXO or tunable crystal to provide a frequency accurate, low phase noise reference clock for the second stage frequency multiplication PLL (PLL2). PLL1 typically uses a narrow loop bandwidth (10 Hz to 200 Hz) to retain the frequency accuracy of the reference clock input signal while at the same time suppressing the higher offset frequency phase noise that the reference clock may have accumulated along its path or from other circuits. This “cleaned” reference clock provides the reference input to PLL2.

The low phase noise reference provided to PLL2 allows PLL2 to operate with a wide loop bandwidth (50 kHz to 200 kHz). The loop bandwidth for PLL2 is chosen to take advantage of the superior high offset frequency phase noise profile of the internal VCO and the good low offset frequency phase noise of the reference VCXO or tunable crystal.

Ultra low jitter is achieved by allowing the external VCXO or Crystal’s phase noise to dominate the final output phase noise at low offset frequencies and the internal VCO’s phase noise to dominate the final output phase noise at high offset frequencies. This results in best overall phase noise and jitter performance.

The LMK04906 allows subsets of the device to be used to increase the flexibility of device. These different modes are selected using *MODE: Device Mode*. For instance:

- Dual Loop Mode - Typical use case of LMK04906. CLKinX used as reference input to PLL1, OSCin port is connected to VCXO or tunable crystal.
- Single Loop Mode - Powers down PLL1. OSCin port is used as reference input.
- Clock Distribution Mode - Allows input of CLKin1 to be distributed to output with division, digital delay, and analog delay.

See *Device Functional Modes* for more information on these modes.

8.1.2 PLL1 Redundant Reference Inputs (CLKin0/CLKin0*, CLKin1/CLKin1*, and CLKin2/CLKin2*)

The LMK04906 has three reference clock inputs for PLL1, CLKin0, CLKin1, and CLKin2. Ref Mux selects CLKin0, CLKin1, or CLKin2. Automatic or manual switching occurs between the inputs.

Copyright © 2012–2017, Texas Instruments Incorporated

Overview (continued)

CLKin0, CLKin1, and CLKin2 each have input dividers. The input divider allows different clock input frequencies to be normalized so that the frequency input to the PLL1 R divider remains constant during automatic switching. By programming these dividers such that the frequency presented to the input of the PLL1_R divider is the same prevents the user from needing to reprogram the PLL1 R divider when the input reference is changed to another CLKin port with a different frequency.

CLKin1 is shared for use as an external 0-delay feedback (FBCLKin), or for use with an external VCO (Fin).

Fast manual switching between reference clocks is possible with a external pins Status_CLKin0, Status_CLKin1, Status_CLKin2. If Status_CLKinx pins are used to select the reference clock, a minimum pulse width of 500ns must be met.

8.1.3 PLL1 Tunable Crystal Support

The LMK04906 integrates a crystal oscillator on PLL1 for use with an external crystal and varactor diode to perform jitter cleaning.

The LMK04906 must be programmed to enable Crystal mode.

8.1.4 VCXO/Crystal Buffered Outputs

The LMK04906 provides a dedicated output which is a buffered copy of the PLL2 reference input. This reference input is typically a low noise VCXO or Crystal. When using a VCXO, this output can be used to clock external devices such as microcontrollers, FPGAs, CPLDs, etc. before the LMK04906 is programmed.

The OSCout0 buffer output type is programmable to LVDS, LVPECL, or LVCMOS.

The dedicated output buffer OSCout0 can output frequency lower than the VCXO or Crystal frequency by programming the OSC Divider. The OSC Divider value range is 1 to 8. Each OSCoutX can individually choose to use the OSC Divider output or to bypass the OSC Divider.

Two clock outputs can also be programmed to be driven by OSCin. This allows a total of 2 additional differential outputs to be buffered outputs of OSCin. When programmed in this way, a total of 3 differential outputs can be driven by a buffered copy of OSCin.

VCXO/Crystal buffered outputs cannot be synchronized to the VCO clock distribution outputs. The assertion of SYNC will still cause these outputs to become low. Since these outputs will turn off and on asynchronously with respect to the VCO sourced clock outputs during a SYNC, it is possible for glitches to occur on the buffered clock outputs when SYNC is asserted and unasserted. If the NO_SYNC_CLKoutX bits are set these outputs will not be affected by the SYNC event except that the phase relationship will change with the other synchronized clocks unless a buffered clock output is used as a qualification clock during SYNC.

8.1.5 Frequency Holdover

The LMK04906 supports holdover operation to keep the clock outputs on frequency with minimum drift when the reference is lost until a valid reference clock signal is re-established.

8.1.6 Integrated Loop Filter Poles

The LMK04906 features programmable 3rd and 4th order loop filter poles for PLL2. These internal resistors and capacitor values may be selected from a fixed range of values to achieve either a 3rd or 4th order loop filter response. The integrated programmable resistors and capacitors compliment external components mounted near the chip.

These integrated components can be effectively disabled by programming the integrated resistors and capacitors to their minimum values.

8.1.7 Internal VCO

The output of the internal VCO is routed to a mux which allows the user to select either the direct VCO output or a divided version of the VCO for the Clock Distribution Path. This same selection is also fed back to the PLL2 phase detector through a prescaler and N-divider.

Copyright © 2012–2017, Texas Instruments Incorporated

Overview (continued)

The mux selectable VCO divider has a divide range of 2 to 8 with 50% output duty cycle for both even and odd divide values.

The primary use of the VCO divider is to achieve divides greater than the clock output divider supports alone.

8.1.8 External VCO Mode

The Fin/Fin* input allows an external VCO to be used with PLL2 of the LMK04906.

Using an external VCO reduces the number of available clock inputs by one.

8.1.9 Clock Distribution

The LMK04906 features a total of 6 outputs driven from the internal or external VCO.

All VCO driven outputs have programmable output types. They can be programmed to LVPECL, LVDS, or LVCMOS. When all distribution outputs are configured for LVCMOS or single ended LVPECL a total of 24 outputs are available.

If the buffered OSCin output OSCout0 is included in the total number of clock outputs the LMK04906 is able to distribute, then up to 6 differential clocks or up to 12 single ended clocks may be generated with the LMK04906.

The following sections discuss specific features of the clock distribution channels that allow the user to control various aspects of the output clocks.

8.1.9.1 CLKout DIVIDER

Each clock output has a single clock output divider. The divider supports a divide range of 1 to 1045 (even and odd) with 50% output duty cycle. When divides of 26 or greater are used, the divider/delay block uses extended mode.

The VCO Divider may be used to reduce the divide needed by the clock output divider so that it may operate in normal mode instead of extended mode. This can result in a small current saving if enabling the VCO Divider allows 3 or more clock output divides to change from extended to normal mode.

8.1.9.2 CLKout Delay

The clock distribution section includes both a fine (analog) and coarse (digital) delay for phase adjustment of the clock outputs.

The fine (analog) delay allows a nominal 25 ps step size and range from 0 to 475 ps of total delay. Enabling the analog delay adds a nominal 500 ps of delay in addition to the programmed value. When adjusting analog delay, glitches may occur on the clock outputs being adjusted. Analog delay may not operate at frequencies above the minimum-specified maximum output frequency of 1536 MHz.

The coarse (digital) delay allows a group of outputs to be delayed by 4.5 to 12 clock distribution path cycles in normal mode, or from 12.5 to 522 VCO cycles in extended mode. The delay step can be as small as half the period of the clock distribution path by using the CLKoutX_HS bit provided the output divide value is greater than 1. For example 2 GHz VCO frequency without using the VCO divider results in 250 ps coarse tuning steps. The coarse (digital) delay value takes effect on the clock outputs after a SYNC event.

There are 3 different ways to use the digital (coarse) delay.

1. *Fixed Digital Delay*
2. *Absolute Dynamic Digital Delay*
3. *Relative Dynamic Digital Delay*

8.1.9.3 Programmable Output Type

For increased flexibility all LMK04906 clock outputs (CLKoutX) and OSCout0 can be programmed to an LVDS, LVPECL, or LVCMOS output type.

Any LVPECL output type can be programmed to 700, 1200, 1600, or 2000 mVpp amplitude levels. The 2000 mVpp LVPECL output type is a Texas Instruments proprietary configuration that produces a 2000 mVpp differential swing for compatibility with many data converters and is also known as 2VPECL.

Copyright © 2012–2017, Texas Instruments Incorporated

Overview (continued)

8.1.9.4 Clock Output Synchronization

Using the SYNC input causes all active clock outputs to share a rising edge. See *Clock Output Synchronization (SYNC)* for more information.

The SYNC event also causes the digital delay values to take effect.

8.1.10 0-Delay

The 0-delay mode synchronizes the input clock phase to the output clock phase. The 0-delay feedback may performed with an internal feedback loop from some of the clock outputs or with an external feedback loop into the FBCLKin port as selected by the FEEDBACK_MUX.

Without using 0-delay mode there will be n possible fixed phase relationships from clock input to clock output depending on the clock output divide value.

Using an external 0-delay feedback reduces the number of available clock inputs by one.

8.1.11 Default Start-Up Clocks

Before the LMK04906 is programmed, CLKout4 is enabled and operating at a nominal frequency and CLKout3 and OSCout0 are enabled and operating at the OSCin frequency. These clocks can be used to clock external devices such as microcontrollers, FPGAs, CPLDs, etc. before the LMK04906 is programmed.

For CLKout3 and OSCout0 to work before the LMK04906 is programmed the device must not be using Crystal mode.

8.1.12 Status Pins

The LMK04906 provides status pins which can be monitored for feedback or in some cases used for input depending upon device programming. For example:

- The Status_Holdover pin may indicate if the device is in hold-over mode.
- The Status_CLKin0 pin may indicate the LOS (loss-of-signal) for CLKin0.
- The Status_CLKin0 pin may be an input for selecting the active clock input.
- The Status_LD pin may indicate if the device is locked.

The status pins can be programmed to a variety of other outputs including analog lock detect, PLL divider outputs, combined PLL lock detect signals, PLL1 Vtune railing, readback, and so forth. See *Status PINS* of this data sheet for more information. Default pin programming is captured in Table 17.

8.1.13 Register Readback

Programmed registers may be read back using the MICROWIRE interface. For readback one of the status pins must be programmed for readback mode.

At no time may registers be programed to values other than the valid states defined in the data sheet.

Copyright © 2012–2017, Texas Instruments Incorporated

8.2 Functional Block Diagram

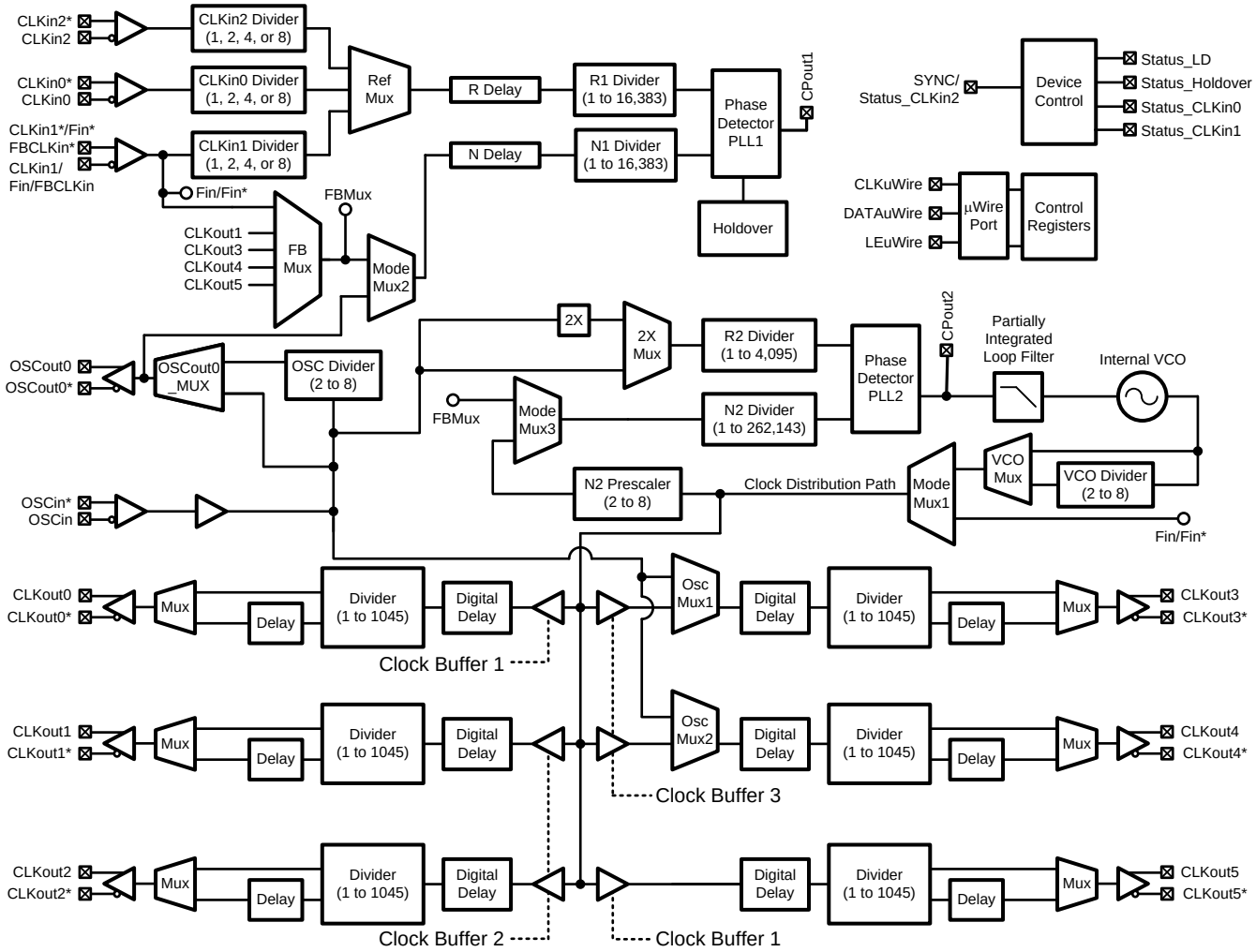

Copyright © 2016, Texas Instruments Incorporated

8.3 Feature Description

8.3.1 Serial MICROWIRE Timing Diagram

Register programming information on the DATAuWire pin is clocked into a shift register on each rising edge of the CLKuWire signal. On the rising edge of the LEuWire signal, the register is sent from the shift register to the register addressed. A slew rate of at least 30 V/µs is recommended for these signals. After programming is complete the CLKuWire, DATAuWire, and LEuWire signals should be returned to a low state. If the CLKuWire or DATAuWire lines are toggled while the VCO is in lock, as is sometimes the case when these lines are shared with other parts, the phase noise may be degraded during this programming. See Figure 6 for timing diagram.

Feature Description (continued)

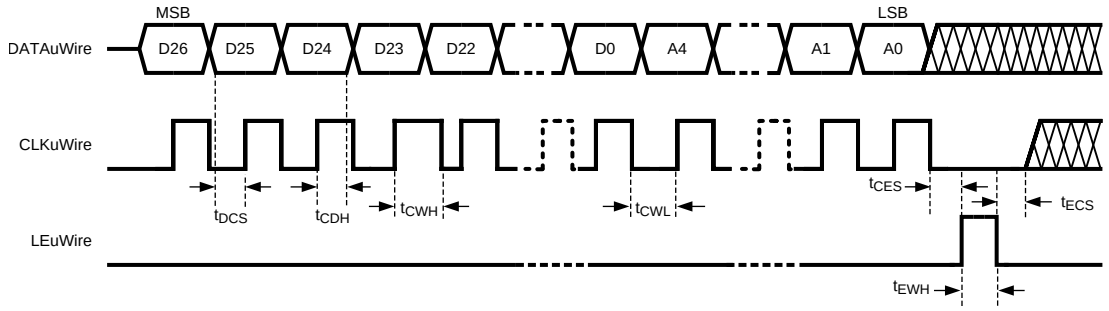

Figure 6. MICROWIRE Timing Diagram

8.3.2 Advanced MICROWIRE Timing Diagrams

8.3.2.1 Three Extra Clocks or Double Program

Figure 7 shows the timing for the programming sequence for loading CLKoutX_DIV > 25 or CLKoutX_DDLY > 12 as described in *Special Programming Case for R0 to R5 for CLKoutX_DIV and CLKoutX_DDLY*.

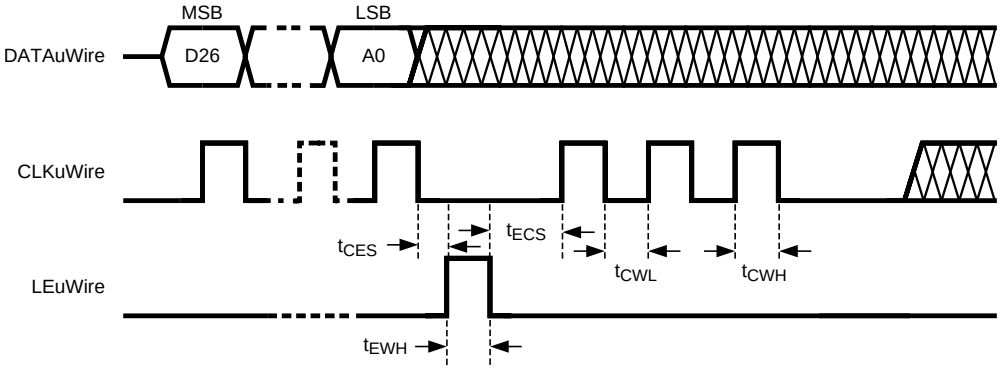

Figure 7. MICROWIRE Timing Diagram: Extra CLKuWire Pulses for R0 to R5

8.3.2.2 Three Extra Clocks With LEuWire High

Figure 8 shows the timing for the programming sequence which allows SYNC_EN_AUTO = 1 when loading CLKoutX_DIV > 25 or CLKoutX_DDLY > 12. When SYNC_EN_AUTO = 1, a SYNC event is automatically generated on the falling edge of LEuWire. See *Special Programming Case for R0 to R5 for CLKoutX_DIV and CLKoutX_DDLY*.

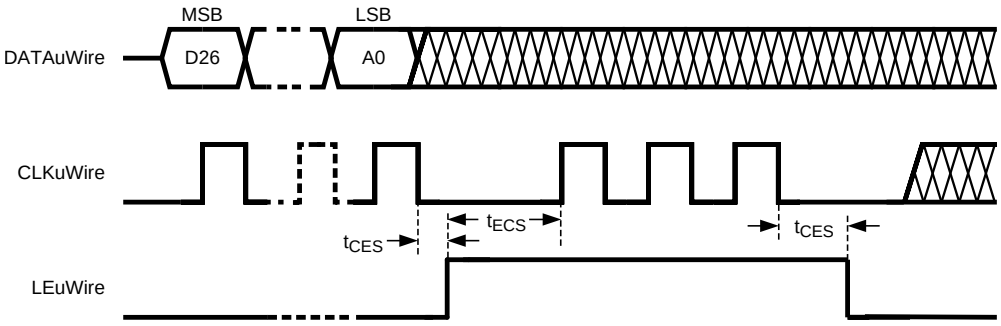

Figure 8. MICROWIRE Timing Diagram: Extra CLKuWire Pulses for R0 to R5 With LEuWire Asserted

Copyright © 2012–2017, Texas Instruments Incorporated

Feature Description (continued)

8.3.2.3 Readback

For timing specifications, see *Timing Requirements*. See *Readback* for more information on performing a readback operation. Figure 9 shows timing for LEuWire for both READBACK_LE = 1 and 0.

The rising edges of CLKuWire during MICROWIRE readback continue to clock data on DATAuWire into the device during readback. If after the readback, LEuWire transitions from low to high, this data will be latched to the decoded register. The decoded register address consists of the last 5 bits clocked on DATAuWire as shown in the MICROWIRE Timing Diagrams.

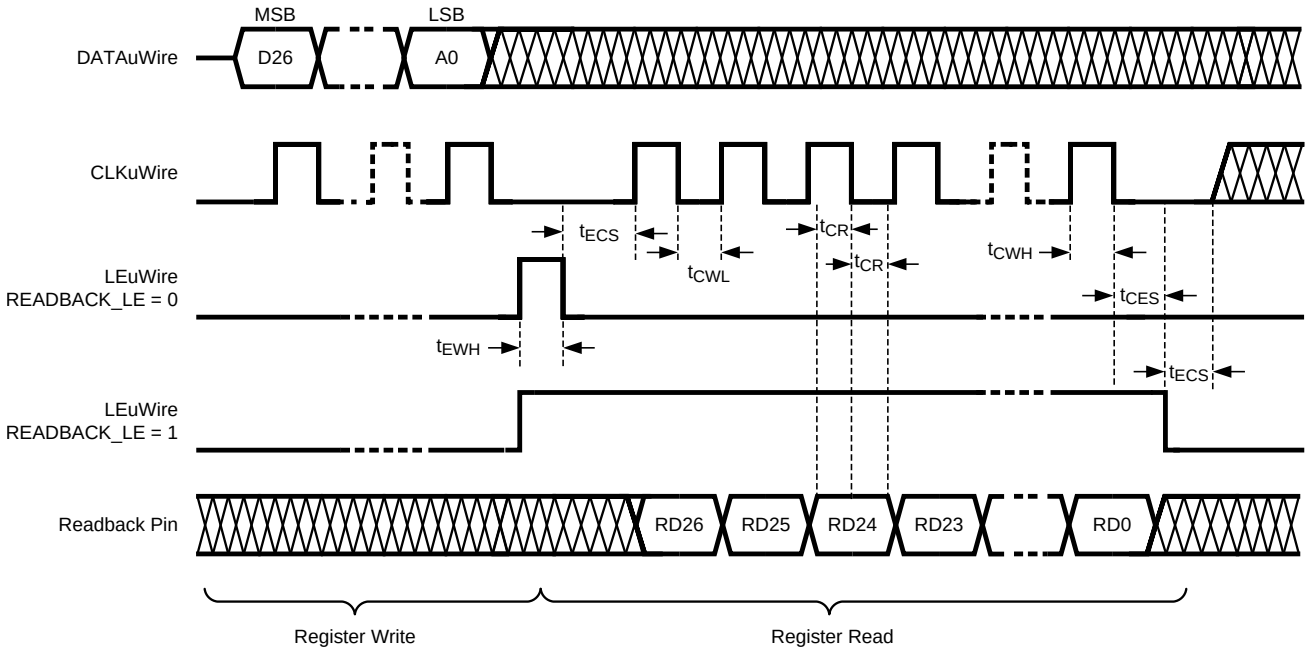

Figure 9. MICROWIRE Readback Timing Diagram

8.3.3 Inputs / Outputs

8.3.3.1 PLL1 Reference Inputs (CLKin0, CLKin1, and CLKin2)

The reference clock inputs for PLL1 may be selected from either CLKin0, CLKin1, or CLKin2. The user has the capability to manually select one of the inputs or to configure an automatic switching mode of operation. See *Input Clock Switching* for more info.

CLKin0, CLKin1, and CLKin2 have dividers which allow the device to switch between reference inputs of different frequencies automatically without needing to reprogram the PLL1 R divider. The CLKin pre-divider values are 1, 2, 4, and 8.

CLKin1 input can alternatively be used for external feedback in 0-delay mode (FBCLKin) or for an external VCO input port (Fin).

8.3.3.2 PLL2 OSCin / OSCin* Port

The feedback from the external oscillator being locked with PLL1 drives the OSCin/OSCin* pins. Internally this signal is routed to the PLL1 N Divider and to the reference input for PLL2.

This input may be driven with either a single-ended or differential signal and must be AC coupled. If operated in single ended mode, the unused input must be connected to GND with a 0.1-µF capacitor.

Copyright © 2012–2017, Texas Instruments Incorporated

Feature Description (continued)

8.3.3.3 Crystal Oscillator

The internal circuitry of the OSCin port also supports the optional implementation of a crystal based oscillator circuit. A crystal, a varactor diode, and a small number of other external components may be used to implement the oscillator. The internal oscillator circuit is enabled by setting the EN_PLL2_XTAL bit. See *EN_PLL2_XTAL*.

8.3.4 Input Clock Switching

Manual, pin select, and automatic are three different kinds clock input switching modes can be set with the CLKin_SELECT_MODE register.

Below is information about how the active input clock is selected and what causes a switching event in the various clock input selection modes.

8.3.4.1 Input Clock Switching - Manual Mode

When CLKin_SELECT_MODE is 0, 1, or 2 then CLKin0, CLKin1, or CLKin2 respectively is always selected as the active input clock. Manual mode will also override the EN_CLKinX bits such that the CLKinX buffer will operate even if CLKinX is is disabled with EN_CLKinX = 0.

Entering Holdover

If holdover mode is enabled then holdover mode is entered if:

Digital lock detect of PLL1 goes low and DISABLE_DLD1_DET = 0.

Exiting Holdover

The active clock for automatic exit of holdover mode is the manually selected clock input.

8.3.4.2 Input Clock Switching - Pin Select Mode

When CLKin_SELECT_MODE is 3, the pins Status_CLKin0 and Status_CLKin1 select which clock input is active.

Clock Switch Event: Pins

Changing the state of Status_CLKin0 or Status_CLKin1 pins causes an input clock switch event.

Clock Switch Event: PLL1 DLD

To prevent PLL1 DLD high to low transition from causing a input clock switch event and causing the device to enter holdover mode, disable the PLL1 DLD detect by setting DISABLE_DLD1_DET = 1. This is the preferred behavior for Pin Select Mode.

Configuring Pin Select Mode

The Status_CLKin0_TYPE must be programmed to an input value for the Status_CLKin0 pin to function as an input for pin select mode.

The Status_CLKin1_TYPE must be programmed to an input value for the Status_CLKin1 pin to function as an input for pin select mode.

If the Status_CLKinX_TYPE is set as output, the input value is considered "0."

Table 1 defines which input clock is active depending on Status_CLKin0 and Status_CLKin1 state.

Table 1. Active Clock Input – Pin Select Mode

Status_CLKin1	Status_CLKin0	ACTIVE CLOCK
0	0	CLKin0
0	1	CLKin1
1	0	CLKin2
1	1	Holdover

Copyright © 2012–2017, Texas Instruments Incorporated

The pin select mode will override the EN_CLKinX bits such that the CLKinX buffer will operate even if CLKinX is is disabled with EN_CLKinX = 0. To switch as fast as possible, keep the clock input buffers enabled (EN_CLKinX = 1) that could be switched to.

8.3.4.2.1 Pin Select Mode and Host

When in the pin select mode, the host can monitor conditions of the clocking system which could cause the host to switch the active clock input. The LMK04906 device can also provide indicators on the Status_LD and Status_HOLDOVER like "DAC Rail," "PLL1 DLD", "PLL1 & PLL2 DLD" which the host can use in determining which clock input to use as active clock input.

8.3.4.2.2 Switch Event Without Holdover

When an input clock switch event is triggered and holdover mode is disabled, the active clock input immediately switches to the selected clock. When PLL1 is designed with a narrow loop bandwidth, the switching transient is minimized.

8.3.4.2.3 Switch Event With Holdover

When an input clock switch event is triggered and holdover mode is enabled, the device will enter holdover mode and remain in holdover until a holdover exit condition is met as described in *Holdover Mode*. Then the device will complete the reference switch to the pin selected clock input.

8.3.4.3 Input Clock Switching – Automatic Mode

When CLKin_SELECT_MODE is 4, the active clock is selected in priority order of enabled clock inputs starting upon an input clock switch event. The priority order of the clocks is CLKin0 → CLKin1 → CLKin2, etc.

For a clock input to be eligible to be switched through, it must be enabled using EN_CLKinX.

8.3.4.3.1 Starting Active Clock

Upon programming this mode, the currently active clock remains active if PLL1 lock detect is high. To ensure a particular clock input is the active clock when starting this mode, program CLKin_SELECT_MODE to the manual mode which selects the desired clock input (CLKin0, 1, or 2). Wait for PLL1 to lock PLL1_DLD = 1, then select this mode with CLKin_SELECT_MODE = 4.

8.3.4.3.2 Clock Switch Event: PLL1 DLD

A loss of lock as indicated by PLL1's DLD signal (PLL1_DLD = 0) will cause an input clock switch event if DISABLE_DLD1_DET = 0. PLL1 DLD must go high (PLL1_DLD = 1) in between input clock switching events.

8.3.4.3.3 Clock Switch Event: PLL1 V_{tune} Rail

If Vtune_RAIL_DET_EN is set and the PLL1 Vtune voltage crosses the DAC high or low threshold, holdover mode will be entered. Since PLL1_DLD = 0 in holdover a clock input switching event will occur.

8.3.4.3.4 Clock Switch Event With Holdover

Holdover mode is entered and the active clock is set to the next enabled clock input in priority order. When the new active clock meets the holdover exit conditions, holdover is exited and the active clock will continue to be used as a reference until another PLL1 loss of lock event. PLL1 DLD must go high in between input clock switching events.

8.3.4.3.5 Clock Switch Event Without Holdover

If holdover is not enabled and an input clock switch event occurs, the active clock is set to the next enabled clock in priority order. The LMK04906 will keep this new input clock as the active clock until another input clock switching event. PLL1 DLD must go high in between input clock switching events.

8.3.4.4 Input Clock Switching - Automatic Mode With Pin Select

When CLKin_SELECT_MODE is 6, the active clock is selected using the Status_CLKinX pins upon an input clock switch event according to Table 2.

Copyright © 2012–2017, Texas Instruments Incorporated

8.3.4.4.1 Starting Active Clock

Upon programming this mode, the currently active clock remains active if PLL1 lock detect is high. To ensure a particular clock input is the active clock when starting this mode, program CLKin_SELECT_MODE to the manual mode which selects the desired clock input (CLKin0 or 1). Wait for PLL1 to lock PLL1_DLD = 1, then select this mode with CLKin_SELECT_MODE = 6.

8.3.4.4.2 Clock Switch Event: PLL1 DLD

An input clock switch event is generated by a loss of lock as indicated by PLL1's DLD signal (PLL1 DLD = 0).

8.3.4.4.3 Clock Switch Event: PLL1 V_{tune} Rail

If Vtune_RAIL_DET_EN is set and the PLL1 Vtune voltage crosses the DAC threshold, holdover mode will be entered. Since PLL1_DLD = 0 in holdover, a clock input switching event will occur.

8.3.4.4.4 Clock Switch Event With Holdover

Clock switch event with holdover enabled is recommended in this input clock switching mode. When an input clock switch event occurs, holdover mode is entered and the active clock is set to the clock input defined by the Status_CLKinX pins. When the new active clock meets the holdover exit conditions, holdover is exited and the active clock will continue to be used as a reference until another input clock switch event. PLL1 DLD must go high in between input clock switching events.

Table 2. Active Clock Input - Auto Pin Mode

Status_CLKin1	Status_CLKin0	ACTIVE CLOCK
X	1	CLKin0
1	0	CLKin1
0	0	CLKin2

The polarity of Status_CLKin1 and Status_CLKin0 input pins can be inverted with the CLKin_SEL_INV bit.

8.3.5 Holdover Mode

Holdover mode causes PLL2 to stay locked on frequency with minimal frequency drift when an input clock reference to PLL1 becomes invalid. While in holdover mode, the PLL1 charge pump is TRI-STATED and a fixed tuning voltage is set on CPout1 to operate PLL1 in open loop.

8.3.5.1 Enable Holdover

Program *HOLDOVER_MODE* to enable holdover mode. Holdover mode can be manually enabled by programming the FORCE_HOLDOVER bit.

The holdover mode can be set to operate in 2 different sub-modes.

- Fixed CPout1 (EN_TRACK = 0 or 1, EN_MAN_DAC = 1).
- Tracked CPout1 (EN_TRACK = 1, EN_MAN_DAC = 0).
  - Not valid when EN_VTUNE_RAIL_DET = 1.

Updates to the DAC value for the Tracked CPout1 sub-mode occurs at the rate of the PLL1 phase detector frequency divided by DAC_CLK_DIV. These updates occur any time EN_TRACK = 1.

The DAC update rate should be programmed for <= 100 kHz to ensure DAC holdover accuracy.

When tracking is enabled the current voltage of DAC can be readback, see *DAC_CNT*.

8.3.5.2 Entering Holdover

The holdover mode is entered as described in *Input Clock Switching*. Typically this is because:

- FORCE_HOLDOVER bit is set.
- PLL1 loses lock according to PLL1_DLD, and
  - HOLDOVER_MODE = 2
  - DISABLE_DLD1_DET = 0

Copyright © 2012–2017, Texas Instruments Incorporated

- CPout1 voltage crosses DAC high or low threshold, and
  - HOLDOVER_MODE = 2
  - EN_VTUNE_RAIL_DET = 1
  - EN_TRACK = 1
  - DAC_HIGH_TRIP = User Value
  - DAC_LOW_TRIP = User Value
  - EN_MAN_DAC = 1
  - MAN_DAC = User Value

8.3.5.3 During Holdover

PLL1 is run in open loop mode.

- PLL1 charge pump is set to TRI-STATE.
- PLL1 DLD will be unasserted.
- The HOLDOVER status is asserted
- During holdover If PLL2 was locked prior to entry of holdover mode, PLL2 DLD will continue to be asserted.
- CPout1 voltage will be set to:
  - a voltage set in the MAN_DAC register (fixed CPout1).
  - a voltage determined to be the last valid CPout1 voltage (tracked CPout1).
- PLL1 DLD will attempt to lock with the active clock input.

The HOLDOVER status signal can be monitored on the Status_HOLDOVER or Status_LD pin by programming the HOLDOVER_MUX or LD_MUX register to "Holdover Status."

8.3.5.4 Exiting Holdover

Holdover mode can be exited in one of two ways.

- Manually, by programming the device from the host.
- Automatically, By a clock operating within a specified ppm of the current PLL1 frequency on the active clock input. See *Input Clock Switching* for more detail on which clock input is active.

To exit holdover by programming, set HOLDOVER_MODE = Disabled. HOLDOVER_MODE can then be re-enabled by programming HOLDOVER_MODE = Enabled. Care should be taken to ensure that the active clock upon exiting holdover is as expected, otherwise the CLKin_SELECT_MODE register may need to be re-programmed.

8.3.5.5 Holdover Frequency Accuracy and DAC Performance

When in holdover mode PLL1 will run in open loop and the DAC will set the CPout1 voltage. If Fixed CPout1 mode is used, then the output of the DAC will be a voltage dependant upon the MAN_DAC register. If Tracked CPout1 mode is used, then the output of the DAC will be the voltage at the CPout1 pin before holdover mode was entered. When using Tracked mode and EN_MAN_DAC = 1, during holdover the DAC value is loaded with the programmed value in MAN_DAC, not the tracked value.

When in Tracked CPout1 mode the DAC has a worst case tracking error of ±2 LSBs once PLL1 tuning voltage is acquired. The step size is approximately 3.2 mV; therefore, the VCXO frequency error during holdover mode caused by the DAC tracking accuracy is ±6.4 mV × Kv. Where Kv is the tuning sensitivity of the VCXO in use. Therefore the accuracy of the system when in holdover mode in ppm is:

$$\text{Holdover accuracy (ppm)} = \frac{\pm 6.4\ \text{mV} \times \text{Kv} \times 1e6}{\text{VCXO Frequency}} \quad (1)$$

Example: consider a system with a 19.2 MHz clock input, a 153.6 MHz VCXO with a Kv of 17 kHz/V. The accuracy of the system in holdover in ppm is:

±0.71 ppm = ±6.4 mV × 17 kHz/V × 1e6 / 153.6 MHz

It is important to account for this frequency error when determining the allowable frequency error window to cause holdover mode to exit.

Copyright © 2012–2017, Texas Instruments Incorporated

8.3.5.6 Holdover Mode - Automatic Exit of Holdover

The LMK04906 device can be programmed to automatically exit holdover mode when the accuracy of the frequency on the active clock input achieves a specified accuracy. The programmable variables include PLL1_WND_SIZE and DLD_HOLD_CNT.

See *Digital Lock Detect Frequency Accuracy* to calculate the register values to cause holdover to automatically exit upon reference signal recovery to within a user specified ppm error of the holdover frequency.

It is possible for the time to exit holdover to vary because the condition for automatic holdover exit is for the reference and feedback signals to have a time/phase error less than a programmable value. Because it is possible for two clock signals to be very close in frequency but not close in phase, it may take a long time for the phases of the clocks to align themselves within the allowable time/phase error before holdover exits.

8.3.6 PLLs

8.3.6.1 PLL1

PLL1's maximum phase detector frequency (f_{PD1}) is 40 MHz. Since a narrow loop bandwidth should be used for PLL1, the need to operate at high phase detector rate to lower the in-band phase noise becomes unnecessary. The maximum values for the PLL1 R and N dividers is 16,383. Charge pump current ranges from 100 to 1600 µA. PLL1 N divider may be driven by OSCin port at the OSCout0_MUX output (default) or by internal or external feedback as selected by Feedback Mux in 0-delay mode.

Low charge pump currents and phase detector frequencies aid design of low loop bandwidth loop filters with reasonably sized components to allow the VCXO or PLL2 to dominate phase noise inside of PLL2 loop bandwidth. High charge pump currents may be used by PLL1 when using VCXOs with leaky tuning voltage inputs to improve system performance.

8.3.6.2 PLL2

PLL2's maximum phase detector frequency (f_{PD2}) is 155 MHz. Operating at highest possible phase detector rate will ensure low in-band phase noise for PLL2 which in turn produces lower total jitter. The in-band phase noise from the reference input and PLL is proportional to N^2. The maximum value for the PLL2 R divider is 4,095. The maximum value for the PLL2 N divider is 262,143. The N2 Prescaler in the total N feedback path can be programmed for values 2 to 8 (all divides even and odd). Charge pump current ranges from 100 to 3200 µA.

High charge pump currents help to widen the PLL2 loop bandwidth to optimize PLL2 performance.

8.3.6.2.1 PLL2 Frequency Doubler

The PLL2 reference input at the OSCin port may be routed through a frequency doubler before the PLL2 R Divider. The frequency doubler feature allows the phase comparison frequency to be increased when a relatively low frequency oscillator is driving the OSCin port. By doubling the PLL2 phase detector frequency, the in-band PLL2 noise is reduced by about 3 dB.

For applications in which the OSCin frequency and PLL2 phase detector frequency are equal, the best PLL2 in-band noise can be achieved when the doubler is enabled (EN_PLL2_REF_2X = 1) and the PLL2 R divide value is 2. Do not use doubler disabled (EN_PLL2_REF_2X = 0) and PLL2 R divide value of 1.

When using the doubler take care to use the PLL2 R Divider to reduce the phase detector frequency to the limit of the PLL2 maximum phase detector frequency.

8.3.6.3 Digital Lock Detect

Both PLL1 and PLL2 support digital lock detect. Digital lock detect compares the phase between the reference path (R) and the feedback path (N) of the PLL. When the time error, which is phase error, between the two signals is less than a specified window size (ε) a lock detect count increments. When the lock detect count reaches a user specified value lock detect is asserted true. Once digital lock detect is true, a single phase comparison outside the specified window will cause digital lock detect to be asserted false. This is illustrated in Figure 10.

The incremental lock detect count feature functions as a digital filter to ensure that lock detect isn't asserted for only a brief time when the phases of R and N are within the specified tolerance for only a brief time during initial phase lock.

Copyright © 2012–2017, Texas Instruments Incorporated

The digital lock detect signal can be monitored on the Status_LD or Status_Holdover pin. The pin may be programmed to output the status of lock detect for PLL1, PLL2, or both PLL1 and PLL2.

See *Digital Lock Detect Frequency Accuracy* for more detailed information on programming the registers to achieve a specified frequency accuracy in ppm with lock detect.

The digital lock detect feature can also be used with holdover to automatically exit holdover mode. See *Holdover Mode* for more info.

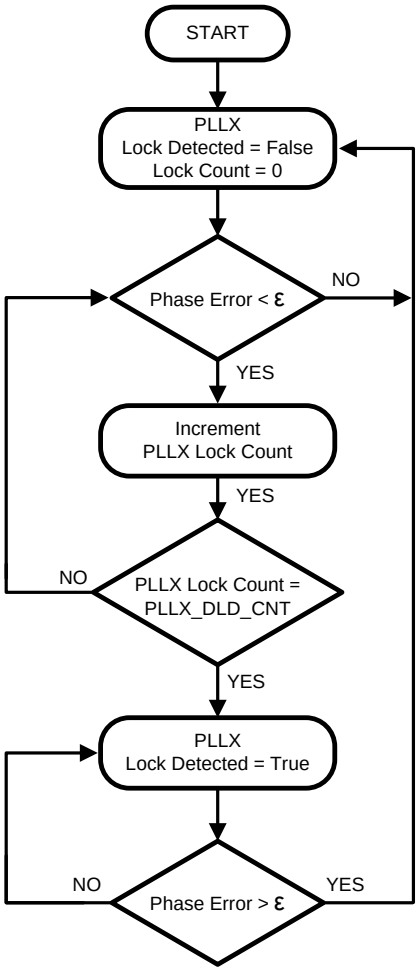

Figure 10. Digital Lock Detect Flowchart

8.3.7 Status PINS

The Status_LD, Status_HOLDOVER, Status_CLKin0, Status_CLKin1, and SYNC/Status_CLKin2 pins can be programmed to output a variety of signals for indicating various statuses like digital lock detect, holdover, several DAC indicators, and several PLL divider outputs.

8.3.7.1 Logic Low

This is a vary simple output. In combination with the output _MUX register, this output can be toggled between high and low. Useful to confirm MICROWIRE programming or as a general purpose IO.

8.3.7.2 Digital Lock Detect

PLL1 DLD, PLL2 DLD, and PLL1 + PLL2 are selectable on certain output pins. See *Digital Lock Detect* for more information.

Copyright © 2012–2017, Texas Instruments Incorporated

8.3.7.3 Holdover Status

Indicates if the device is in Holdover mode. See *Holdover Mode* for more information.

8.3.7.4 DAC

Various flags for the DAC can be monitored including DAC Locked, DAC Rail, DAC Low, and DAC High.

When the PLL1 tuning voltage crosses the low threshold, DAC Low is asserted. When PLL1 tuning voltage crosses the high threshold, DAC High is asserted. When either DAC Low or DAC High is asserted, DAC Rail will also be asserted.

DAC Locked is asserted when EN_Track = 1 and DAC is closely tracking the PLL1 tuning voltage.

8.3.7.5 PLL Divider Outputs

The PLL divider outputs are useful for debugging failure to lock issues. It allows the user to measure the frequency the PLL inputs are receiving. The settings of PLL1_R, PLL1_N, PLL2_R, and PLL2_N output pulses at the phase detector rate. The settings of PLL1_R / 2, PLL1_N / 2, PLL2_R / 2, and PLL2_N / 2 output a 50% duty cycle waveform at half the phase detector rate.

8.3.7.6 CLKinX_LOS

The clock input loss of signal indicator is asserted when LOS is enabled (*EN_LOS*) and the clock no longer detects an input as defined by the time-out threshold, *LOS_TIMEOUT*. The loss of signal indicator detects a loss of signal on CLKinX only when CLKinX_BUF_TYPE is configured as Bipolar.

8.3.7.7 CLKinX Selected

If this clock is the currently selected/active clock, this pin will be asserted.

8.3.7.8 MICROWIRE Readback

The readback data can be output on any pin programmable to readback mode. For more information on readback see *Readback*.

8.3.8 VCO

The integrated VCO uses a frequency calibration routine when register R30 is programmed to lock VCO to target frequency. Register R30 contains the PLL2_N register.

During the frequency calibration the PLL2_N_CAL value is used instead of PLL2_N, this allows 0-delay modes to have a separate PLL2 N value for VCO frequency calibration and regular operation.

8.3.9 Clock Distribution

8.3.9.1 Fixed Digital Delay

This section discussing Fixed Digital delay and associated registers is fundamental to understanding digital delay and dynamic digital delay.

Clock outputs may be delayed or advanced from one another by up to 517.5 clock distribution path periods. By programming a digital delay value from 4.5 to 522 clock distribution path periods, a relative clock output delay from 0 to 517.5 periods is achieved. The CLKoutX_DDLY (5 to 522) and CLKoutX_HS (–0.5 or 0) registers set the digital delay as shown in Table 3.

Table 3. Possible Digital Delay Values

CLKoutX_DDLY	CLKoutX_HS	Digital Delay
5	1	4.5
5	0	5
6	1	5.5
6	0	6
7	1	6.5

Copyright © 2012–2017, Texas Instruments Incorporated

Table 3. Possible Digital Delay Values (continued)

CLKoutX_DDLY	CLKoutX_HS	Digital Delay
7	0	7
...	...	...
520	0	520
521	1	520.5
521	0	521
522	1	521.5
522	0	522

NOTE

Digital delay values only take effect during a SYNC event and if the NO_SYNC_CLKoutX bit is cleared for this clock output. See *Clock Output Synchronization (SYNC)* for more information.

The resolution of digital delay is determined by the frequency of the clock distribution path. The clock distribution path is the output of Mode Mux1 (*Functional Block Diagram*). The best resolution of digital delay is achieved by bypassing the VCO divider.

$$\text{Digital Delay Resolution (with VCO Divider)} = \frac{\text{VCO_DIV}}{2 \times \text{VCO Frequency}} \quad (2)$$

$$\text{Digital Delay Resolution (VCO Divider bypassed or external VCO)} = \frac{1}{2 \times \text{VCO Frequency}} \quad (3)$$

The digital delay between clock outputs can be dynamically adjusted with no or minimum disruption of the output clocks. See *Dynamically Programming Digital Delay* for more information.

8.3.9.2 Fixed Digital Delay - Example

Given a VCO frequency of 2457.6 MHz and no VCO divider, by using digital delay the outputs can be adjusted in 1 / (2 × 2457.6 MHz) = approximately 203.5-ps steps.

To achieve quadrature (90 degree shift) between the 122.88-MHz outputs on CLKout4 and CLKout3 from a VCO frequency of 2457.6 MHz and bypassing the VCO divider, consider the following:

1. The frequency of 122.88 MHz has a period of ~8.14 ns.
2. To delay 90 degrees of a 122.88 MHz clock period requires an approximately 2.03-ns delay.
3. Given a digital delay step of ~203.5 ps, this requires a digital delay value of 12 steps (2.03 ns / 20.35 ps = 10).
4. Since the 10 steps are half period steps, CLKout3_DDLY is programmed 5 full periods beyond 5 for a total of 10.

This result in the following programming:

- Clock output dividers to 20. CLKout2_DIV = 20 and CLKout3_DIV = 20.
- Set first clock digital delay value. CLKout2_DDLY = 5, CLKout2_HS = 0.
- Set second 90 degree shifted clock digital delay value. CLKout3_DDLY = 10, CLKout3_HS = 0.

Table 4 shows some of the possible phase delays in degrees achievable in the above example.

Copyright © 2012–2017, Texas Instruments Incorporated

Table 4. Relative Phase Shift from CLKout2 to CLKout3 CLKout3_DDLY = 5 and CLKout3_HS = 0

CLKout3_DDLY	CLKout_HS	RELATIVE DIGITAL DELAY	DEGREES of 122.88 MHz
5	1	–0.5	–9°
5	0	0	0°
6	1	0.5	9°
6	0	1	18°
7	1	1.5	27°
7	0	2	36°
8	1	2.5	45°
8	0	3	54°
9	1	3.5	63°
9	0	4	72°
10	1	4.5	81°
10	0	5	90°
11	1	5.5	99°
11	0	6	108°
12	1	6.5	117°
12	0	7	126°
13	1	7.5	135°
13	0	8	144°
14	1	8.5	153°
—	—	—	—

Figure 12 illustrates clock outputs programmed with different digital delay values during a SYNC event.

See *Dynamically Programming Digital Delay* for more information on dynamically adjusting digital delay.

8.3.9.3 Clock Output Synchronization (SYNC)

The purpose of the SYNC function is to synchronize the clock outputs with a fixed and known phase relationship between each clock output selected for SYNC. SYNC can also be used to hold the outputs in a low or 0 state. The NO_SYNC_CLKoutX bits can be set to disable synchronization for a clock output.

To enable SYNC, EN_SYNC must be set. See *EN_SYNC, Enable Synchronization*.

The digital delay value set by CLKoutX_DDLY takes effect only upon a SYNC event. The digital delay due to CLKoutX_HS takes effect immediately upon programming. See *Dynamically Programming Digital Delay* for more information on dynamically changing digital delay.

During a SYNC event, clock outputs driven by the VCO are not synchronized to clock outputs driven by OSCin. OSCout0 is always driven by OSCin. CLKout3 or 4 may be driven by OSCin depending on the CLKoutX_OSCin_Sel bit value. While SYNC is asserted, NO_SYNC_CLKoutX operates normally for CLKout3 and 4 under all circumstances. SYNC operates normally for CLKout3 and 4 when driven by VCO.

8.3.9.3.1 Effect of SYNC

When SYNC is asserted, the outputs to be synchronized are held in a logic low state. When SYNC is unasserted, the clock outputs to be synchronized are activated and will transition to a high state simultaneously with one another except where different digital delay values have been programmed.

See *Dynamically Programming Digital Delay* for SYNC functionality when SYNC_QUAL = 1.

Copyright © 2012–2017, Texas Instruments Incorporated

Table 5. Steady State Clock Output Condition Given Specified Inputs

SYNC_TYPE	SYNC_POL_INV	SYNC PIN	CLOCK OUTPUT STATE
0,1,2 (Input)	0	0	Active
0,1,2 (Input)	0	1	Low
0,1,2 (Input)	1	0	Low
0,1,2 (Input)	1	1	Active
3, 4, 5, 6 (Output)	0	0 or 1	Active
3, 4, 5, 6 (Output)	1	0 or 1	Low

8.3.9.3.2 Methods of Generating SYNC

There are five methods to generate a SYNC event:

- **Manual:**
  - Asserting the SYNC pin according to the polarity set by SYNC_POL_INV.
  - Toggling the SYNC_POL_INV bit though MICROWIRE will cause a SYNC to be asserted.
- **Automatic:**
  - If PLL1_SYNC_DLD or PLL2_SYNC_DLD is set, the SYNC pin will be asserted while DLD (digital lock detect) is false for PLL1 or PLL2 respectively.
  - Programming Register R30, which contains PLL2_N will generate a SYNC event when using the internal VCO.
  - Programming Register R0 through R5 when SYNC_EN_AUTO = 1.

NOTE

Due to the speed of the clock distribution path (as fast as approximately 325-ps period) and the slow slew rate of the SYNC, the exact VCO cycle at which the SYNC is asserted or unasserted by the SYNC is undefined. The timing diagrams show a sharp transition of the SYNC to clarify functionality.

8.3.9.3.3 Avoiding Clock Output Interruption Due to SYNC

Any CLKout outputs that have their NO_SYNC_CLKoutX bits set will be unaffected by the SYNC event. It is possible to perform a SYNC operation with the NO_SYNC_CLKoutX bits cleared, then set the NO_SYNC_CLKoutX bits so that the selected clocks will not be affected by a future SYNC. Future SYNC events will not effect these clocks but will still cause the newly synchronized clocks to be re-synchronized using the currently programmed digital delay values. When this happens, the phase relationship between the first group of synchronized clocks and the second group of synchronized clocks will be undefined unless the SYNC pulse is qualified by an output clock. See *Dynamically Programming Digital Delay*.

8.3.9.3.4 SYNC Timing

When discussing the timing of the SYNC function, one cycle refers to one period of the clock distribution path.

Copyright © 2012–2017, Texas Instruments Incorporated

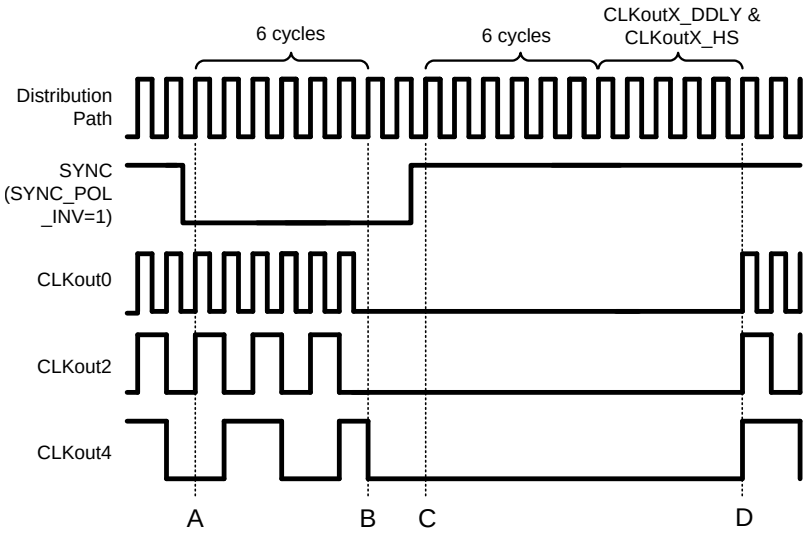

CLKout0_DIV = 0(valid only for external VCO mode)
CLKout2_DIV = 2
CLKout4_DIV = 4
The digital delay for all clock outputs is 5
The digital delay half step for all clock outputs is 0
SYNC_QUAL = 0 (No qualification)

Figure 11. Clock Output Synchronization Using the SYNC Pin (Active Low)

See Figure 11 during this discussion on the timing of SYNC. SYNC must be asserted for greater than one clock cycle of the clock distribution path to latch the SYNC event. After SYNC is asserted, the SYNC event is latched on the rising edge of the distribution path clock, at time A. After this event has been latched, the outputs will not reflect the low state for 6 cycles, at time B. Due to the asynchronous nature of SYNC with respect to the output clocks, it is possible that a glitch pulse could be created when the clock output goes low from the SYNC event. This is shown by CLKout4 in Figure 11 and CLKout2 in Figure 12. See *Relative Dynamic Digital Delay* for more information on synchronizing relative to an output clock to eliminate or minimize this glitch pulse.

After SYNC becomes unasserted the event is latched on the following rising edge of the distribution path clock, time C. The clock outputs will rise at time D, coincident with a rising distribution clock edge that occurs after 6 cycles plus as many more cycles as programmed by the digital delay for that clock output. Therefore, the soonest a clock output will become high is 11 cycles after the SYNC unassertion event registration, time C, when the smallest digital delay value of 5 is set. If CLKoutX_HS = 1 and CLKoutX_DDLY = 5, then the clock output will rise 10.5 cycles after SYNC is unassertion event registration.

Copyright © 2012–2017, Texas Instruments Incorporated

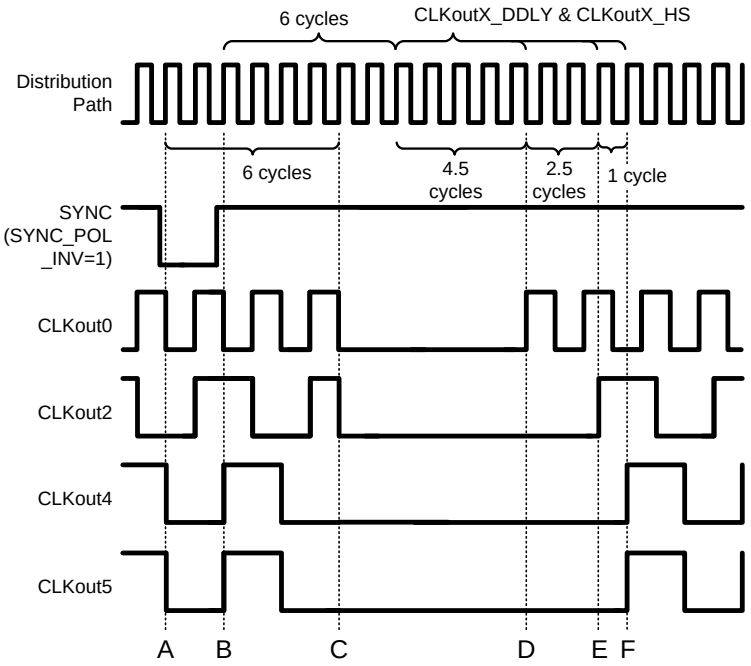

CLKout0_DIV = 2, CLKout0_DDLY = 5
CLKout2_DIV = 4, CLKout2_DDLY = 7
CLKout4_DIV = 4, CLKout4_DDLY = 8
CLKout5_DIV = 4, CLKour4_DDLY = 8
CLKout0_HS = 1
CLKout2_HS = 0
CLKout4_HS = 0
CLKout5_HS = 0
SYNC_QUAL = 0 (No qualification)

Figure 12. Clock Output Synchronization Using the SYNC Pin (Active Low)

Figure 12 illustrates the timing with different digital delays programmed.

- Time A) SYNC assertion event is latched.
- Time B) SYNC unassertion latched.
- Time C) All outputs toggle and remain low. A glitch pulse can occur at this time as shown by CLKout2.
- Time D) After 6 + 4.5 = 10.5 cycles CLKout0 rises. This is the shortest time from SYNC unassertion registration to clock rising edge possible.
- Time E) After 6 + 7 = 13 cycles CLKout2 rises. CLKout2 and CLKout4, 5 are programmed for quadrature operation.
- Time F) After 6 + 8 = 14 cycles CLKout4 and 5 rise.

8.3.9.4 Dynamically Programming Digital Delay

To use dynamic digital delay synchronization qualification set SYNC_QUAL = 1. This causes the SYNC pulse to be qualified by a clock output so that the SYNC event occurs after a specified time from a clock output transition. This allows the relative adjustment of clock output phase in real-time with no or minimum interruption of clock outputs. Hence the term dynamic digital delay.

Note that changing the phase of a clock output requires momentarily altering in the rate of change of the clock output phase and therefore by definition results in a frequency distortion of the signal.

Without qualifying the SYNC with an output clock, the newly synchronized clocks would have a random and unknown digital delay (or phase) with respect to clock outputs not currently being synchronized.

8.3.9.4.1 Absolute vs Relative Dynamic Digital Delay

The clock used for qualification of SYNC is selected with the feedback mux (FEEDBACK_MUX).

Copyright © 2012–2017, Texas Instruments Incorporated

If the clock selected by the feedback mux has its NO_SYNC_CLKoutX = 1, then an **absolute dynamic digital delay** adjustment will be performed during a SYNC event and the digital delay of the feedback clock **will not** be adjusted.

If the clock selected by the feedback mux has its NO_SYNC_CLKoutX = 0, then a self-referenced or **relative dynamic digital delay** adjustment will be performed during a SYNC event and the digital delay of the feedback clock **will** be adjusted.

Clocks with NO_SYNC_CLKoutX = 1 always operate without interruption.

8.3.9.4.2 Dynamic Digital Delay and 0-Delay Mode

When using a 0-delay mode **absolute** dynamic digital delay is recommended. Using **relative** dynamic digital delay with a 0-delay mode may result in a momentary clock loss on the adjusted clock also being used for 0-delay feedback that may result in PLL1 DLD becoming low. This may result in HOLDOVER mode being activated depending upon device configuration.

8.3.9.4.3 SYNC and Minimum Step Size

The minimum step size adjustment for digital delay is half a clock distribution path cycle. This is achieved by using the CLKoutX_HS bit. The CLKoutX_HS bit change effect is immediate without the need for SYNC. To shift digital delay using CLKoutX_DDLY a SYNC signal must be generated for the change to take effect.

8.3.9.4.4 Programming Overview

To dynamically adjust the digital delay with respect to an existing clock output the device should be programmed as follows:

- Set SYNC_QUAL = 1 for clock output qualification.
- Set CLKout2_PD = 0. Required for proper operation of SYNC_QUAL = 1.
- Set EN_FEEDBACK_MUX = 1 to enable the feedback buffer.
- Set FEEDBACK_MUX to the clock output that the newly synchronized clocks will be qualified by.
- Set NO_SYNC_CLKoutX = 1 for the output clocks that will continue to operate during the SYNC event. There is no interruption of output on these clocks.
  - If FEEDBACK_MUX selects a clock output with NO_SYNC_CLKoutX = 1, then **absolute dynamic digital delay** is performed.
  - If FEEDBACK_MUX selects a clock output with NO_SYNC_CLKoutX = 0, then self-referenced or **relative dynamic digital delay** is performed.
- The SYNC_EN_AUTO bit may be set to cause a SYNC event to begin when register R0 to R5 is programmed. The auto SYNC feature is a convenience since does not require the application to manually assert SYNC by toggling the SYNC_POL_INV bit or the SYNC pin when changing digital delay. However, under the following condition a special programming sequence is required if SYNC_EN_AUTO = 1:
  - The CLKoutX_DDLY value being set in the programmed register is 13 or more.
- Under the following condition a SYNC_EN_AUTO must = 0:
  - If the application requires a digital delay resolution of half a clock distribution path cycle in **relative** dynamic digital delay mode because the HS bit must be fixed per Table 6 for a qualifying clock.

8.3.9.4.5 Internal Dynamic Digital Delay Timing

To dynamically adjust digital delay a SYNC must occur. Once the SYNC is qualified by an output clock, 3 cycles later an internal one shot pulse will occur. The width of the one shot pulse is 3 cycles. This internal one shot pulse will cause the outputs to turn off and then back on with a fixed delay with respect to the falling edge of the qualification clock. This allows for dynamic adjustments of digital delay with respect to an output clock.

The qualified SYNC timing is shown in Figure 13 for absolute dynamic digital delay and Figure 14 for relative dynamic digital delay.

8.3.9.4.6 Other Timing Requirements

When adjusting digital delay dynamically, the falling edge of the qualifying clock selected by the FEEDBACK_MUX must coincide with the falling edge of the clock distribution path. For this requirement to be met, program the CLKoutX_HS value of the qualifying clock output according to Table 6.

Copyright © 2012–2017, Texas Instruments Incorporated

Table 6. Half Step Programming Requirement of Qualifying Clock During SYNC Event

DISTRIBUTION PATH FREQUENCY	CLKoutX_DIV value	CLKoutX_HS
≥ 1.8 GHz	Even	Must = 1 during SYNC event.
	Odd	Must = 0 during SYNC event.
< 1.8 GHz	Even	Must = 0 during SYNC event.
	Odd	Must = 1 during SYNC event.

8.3.9.5 Absolute Dynamic Digital Delay

Absolute dynamic digital delay can be used to program a clock output to a specific phase offset from another clock output.

Pros:

- Simple direct phase adjustment with respect to another clock output.
- CLKoutX_HS will remain constant for qualifying clock.
  - Can easily use auto sync feature (SYNC_EN_AUTO = 1) when digital delay adjustment requires half step digital delay requirements.
- Can be used with 0-delay mode.

Cons:

- For some phase adjustments there may be a glitch pulse due to SYNC assertion.
  - For example see CLKout4 in Figure 11 and CLKout2 in Figure 12.

8.3.9.5.1 Absolute Dynamic Digital Delay - Example

To illustrate the absolute dynamic digital delay adjust procedure, consider the following example.

System Requirements:

- VCO Frequency = 2457.6 MHz
- CLKout0 = 819.2 MHz (CLKout0_DIV = 3)
- CLKout2 = 307.2 MHz (CLKout2_DIV = 8)
- CLKout4 = 245.76 MHz (CLKout4_DIV = 10)
- For all clock outputs during initial programming:
  - CLKoutX_DDLY = 5
  - CLKoutX_HS = 1
  - NO_SYNC_CLKoutX = 0

The application requires the 307.2 MHz clock to be stepped in 22.5 degree steps (approximately 203.4 ps), which is the minimum step resolution allowable by the clock distribution path requiring use of the half step bit (CLKoutX_HS). That is 1 / 2457.6 MHz / 2 = ~203.4 ps. During the stepping of the 307.2 MHz clock the 819.2 MHz and 245.76 MHz clock must not be interrupted.

1. The device is programmed from register R0 to R30 with values that result in the device being locked and operating as desired, see the system requirements above. The phase of all the output clocks are aligned because all the digital delay and half step values were the same when the SYNC was generated by programming register R30. The timing of this is as shown in Figure 11.
2. Now the registers will be programmed to prepare for changing digital delay (or phase) dynamically.

Table 7. Register Setup for Absolute Dynamic Digital Delay Example

REGISTER	PURPOSE
SYNC_QUAL = 1	Use a clock output for qualifying the SYNC pulse for dynamically adjusting digital delay.
EN_SYNC = 1 (default)	Required for SYNC functionality.
CLKout2_PD = 0	Required when SYNC_QUAL = 1. CLKout2 outputs may be powered down or in use.
EN_FEEDBACK_MUX = 1	Enable the feedback mux for SYNC operation for dynamically adjusting digital delay.
FEEDBACK_MUX = 2 (CLKout4)	Use the fixed 245.76 MHz clock as the SYNC qualification clock.

Copyright © 2012–2017, Texas Instruments Incorporated

Table 7. Register Setup for Absolute Dynamic Digital Delay Example (continued)

REGISTER	PURPOSE
NO_SYNC_CLKout0 = 1	This clock output (819.2 MHz) won't be affected by SYNC. It will always operate without interruption.
NO_SYNC_CLKout4 = 1	This clock output (245.76 MHz) won't be affected by SYNC. It will always operate without interruption. This clock will also be the *qualifying clock* in this example.
CLKout4_HS = 1	Since CLKout4 is the qualifying clock and CLKoutX_DIV is even, the half step bit must be set to 1. See Table 6.
SYNC_EN_AUTO = 1	Automatic generation of SYNC is allowed for this case.

After the registers in Table 7 have been programmed, the application may now dynamically adjust the digital delay of CLKout2 (307.2 MHz).

3. Adjust digital delay of CLKout2.

See Table 8 for the programming values to set a specified phase offset from the absolute reference clock. Table 8 is dependant upon the qualifying clock divide value of 12, see *Calculating Dynamic Digital Delay Values For Any Divide* for information on creating tables for any divide value.

Table 8. Programming for Absolute Digital Delay Adjustment

DEGREES OF ADJUSTMENT FROM INITIAL 307.2-MHZ PHASE		PROGRAMMING
±0 or ±360 degrees		CLKout2_DDLY = 14; CLKout2_HS = 1
22.5°	–337.5°	CLKout2_DDLY = 14; CLKout2_HS = 0
45°	–315°	CLKout2_DDLY = 15; CLKout2_HS = 1
67.5°	–292.54°	CLKout2_DDLY = 5; CLKout2_HS = 0
90°	–270°	CLKout2_DDLY = 6; CLKout2_HS = 1
112.5°	–247.5°	CLKout2_DDLY = 6; CLKout2_HS = 0
135°	–25°	CLKout2_DDLY = 7; CLKout2_HS = 1
157.5°	–202.5°	CLKout2_DDLY = 7; CLKout2_HS = 0
180°	–180°	CLKout2_DDLY = 8; CLKout2_HS = 1
247.5°	–112.5°	CLKout2_DDLY = 8; CLKout2_HS = 0
270°	–90°	CLKout2_DDLY = 9; CLKout2_HS = 1
292.5°	–67.5°	CLKout2_DDLY = 9; CLKout2_HS = 0
315°	–45°	CLKout2_DDLY = 10; CLKout2_HS = 1
337.5°	–22.5°	CLKout2_DDLY = 10; CLKout2_HS = 0

After setting the new digital delay values, the act of programming R1 will start a SYNC automatically because SYNC_EN_AUTO = 1.

If the user elects to reduce the number of SYNCs because they are not required when only CLKout2_HS is set, then SYNC_EN_AUTO is = 0 and the SYNC may now be generated by toggling the SYNC pin or by toggling the SYNC_POL_INV bit. Because of the internal one shot pulse, no strict timing of the SYNC pin or SYNC_POL_INV bit is required.

After the SYNC event, the clock output will adjust according to Table 8. See Figure 13 for a detailed view of the timing diagram. The timing diagram critical points are:

- Time A) SYNC assertion event is latched.
- Time B) First qualifying falling clock output edge.
- Time C) Second qualifying falling clock output edge.
- Time D) Internal one shot pulse begins. 5 cycles later clock outputs will be forced low
- Time E) Internal one shot pulse ends. 5.5 cycles + digital delay cycles later the synced clock outputs rise.
- Time F) Clock outputs are forced low. (CLKout2 is already low).
- Time G) Beginning of digital delay cycles.
- Time H) For CLKout2_DDLY = 14; the clock output rises now.

Copyright © 2012–2017, Texas Instruments Incorporated

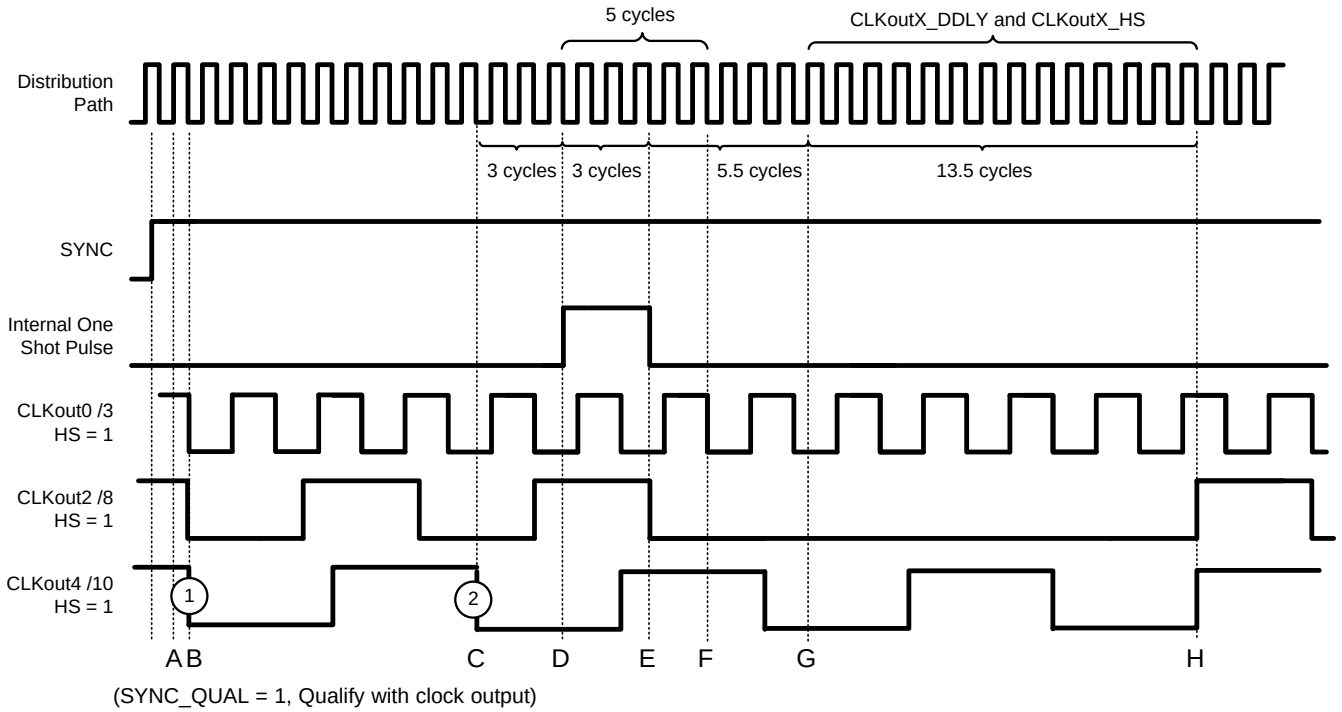

Figure 13. Absolute Dynamic Digital Delay Programming Example

8.3.9.6 Relative Dynamic Digital Delay

Relative dynamic digital delay can be used to program a clock output to a specific phase offset from another clock output.

Pros:

- Simple direct phase adjustment with respect to same clock output.
- The clock output will always behave the same during digital delay adjustment transient. For some divide values there will be no glitch pulse.

Cons:

- For some clock divide values there may be a glitch pulse due to SYNC assertion.
- Adjustments of digital delay requiring the half step bit (CLKoutX_HS) for finer digital delay adjust is complicated.
- Use with 0-delay mode may result in PLL1 DLD becoming low and HOLDOVER mode becoming activated.
  - DISABLE_DLD1_DET can be set to prevent HOLDOVER from becoming activated due to PLL1 DLD becoming low.

8.3.9.6.1 Relative Dynamic Digital Delay - Example

To illustrate the relative dynamic digital delay adjust procedure, consider the following example.

System Requirements:

- VCO Frequency = 2457.6 MHz
- CLKout0 = 819.2 MHz (CLKout0_DIV = 3)
- CLKout2 = 491.52 MHz (CLKout2_DIV = 5)
- CLKout4 = 491.52 MHz (CLKout4_DIV = 5)
- For all clock outputs during initial programming:
  - CLKoutX_DDLY = 5
  - CLKoutX_HS = 0
  - NO_SYNC_CLKoutX = 0

The application requires the 491.52 MHz clock to be stepped in 22.5degree steps (~203.4 ps), which is the minimum step resolution allowable by the clock distribution path. That is 1 / 2457.62 MHz / 2 = ~203.4 ps. During the stepping of the 491.52 MHz clocks the 819.2 MHz clock must not be interrupted.

1. The device is programmed from register R0 to R30 with values that result in the device being locked and operating as desired, see the system requirements above. The phase of all the output clocks are aligned because all the digital delay and half step values were the same when the SYNC was generated by programming register R30. The timing of this is as shown in Figure 11.
2. Now the registers will be programmed to prepare for changing digital delay (or phase) dynamically.

Table 9. Register Setup for Relative Dynamic Digital Delay Adjustment

REGISTER	PURPOSE
SYNC_QUAL = 1	Use clock output for qualifying the SYNC pulse for dynamically adjusting digital delay.
EN_SYNC = 1 (default)	Required for SYNC functionality.
CLKout2_PD = 0	Required when SYNC_QUAL = 1. CLKout2 outputs may be powered down or in use.
EN_FEEDBACK_MUX = 1	Enable the feedback mux for SYNC operation for dynamically adjusting digital delay.
FEEDBACK_MUX = 1 (CLKout2)	Use the clock itself as the SYNC qualification clock.
NO_SYNC_CLKout0 = 1	This clock output (819.2 MHz) won't be affected by SYNC. It will always operate without interruption.
NO_SYNC_CLKout4 = 1	CLKout4's phase is not to change with respect to CLKout0.
SYNC_EN_AUTO = 0 (default)	Automatic generation of SYNC is not allowed because of the half step requirement in relative dynamic digital delay mode. SYNC must be generated manually by toggling the SYNC_POL_INV bit or the SYNC pin.

After the above registers have been programmed, the application may now dynamically adjust the digital delay of the 491.52 MHz clocks.

3. Adjust digital delay of CLKout2 by one step which is 22.5 degrees or approximately 203.4 ps.

See Table 10 for the programming sequence to step one half clock distribution period forward or backwards. Refer to *Calculating Dynamic Digital Delay Values For Any Divide* for more information on how to calculate digital delay and half step values for other cases.

To fulfill the qualifying clock output half step requirement in Table 6 when dynamically adjusting digital delay, the CLKoutX_HS bit must be cleared for clocks with even divides. So before any dynamic digital delay adjustment, CLKoutX_HS must be clear because the clock divide value is even. To achieve the final required digital delay adjustment, the CLKoutX_HS bit may set after SYNC.

Table 10. Programming Sequence for One Step Adjust

STEP DIRECTION AND CURRENT HS STATE	PROGRAMMING SEQUENCE
Adjust clock output one step forward. CLKout2_HS is 0.	1. CLKout2_HS = 1.
Adjust clock output one step forward. CLKout2_HS is 1.	1. CLKout2_DDLY = 11. 2. Perform SYNC event. 3. CLKout2_HS = 0.
Adjust clock output one step backward. CLKout2_HS is 0.	1. CLKout2_HS = 1. 2. CLKout2_DDLY =11. 3. Perform SYNC event.
Adjust clock output one step backward. CLKout2_HS is 1.	1. CLKout2_HS = 0.

After programing the updated CLKout2_DDLY and CLKout2_HS values, perform a SYNC event. The SYNC may be generated by toggling the SYNC pin or by toggling the SYNC_POL_INV bit. Because of the internal one shot pulse, no strict timing of the SYNC pin or SYNC_POL_INV bit is required. After the SYNC event, the clock output will be at the specified phase. See Figure 14 for a detailed view of the timing diagram. The timing diagram critical points are:

- Time A) SYNC assertion event is latched.

Copyright © 2012–2017, Texas Instruments Incorporated

- Time B) First qualifying falling clock output edge.
- Time C) Second qualifying falling clock output edge.
- Time D) Internal one shot pulse begins. 5 cycles later clock outputs will be forced low.
- Time E) Internal one shot pulse ends. 5.5 cycles + digital delay cycles later the synced clock outputs rise.
- Time F) Clock outputs are forced low. (CLKouts are already low).
- Time G) Beginning of digital delay cycles.
- Time H) For CLKout2_DDLY = 11; the clock output rises now.

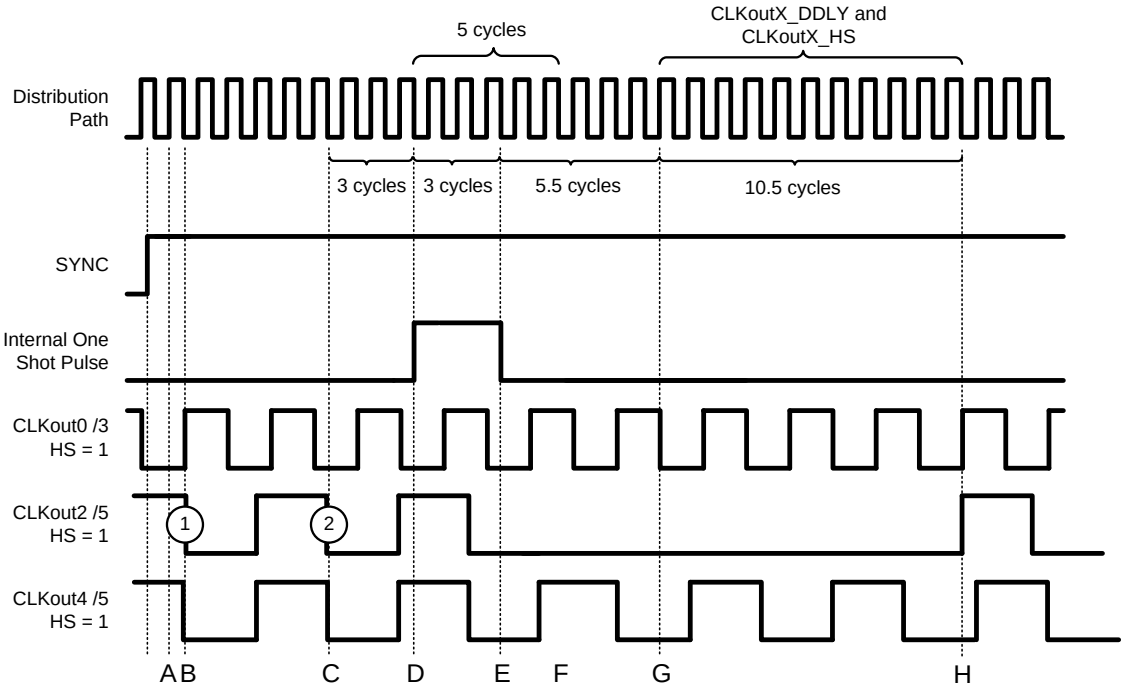

(SYNC_QUAL = 1, Qualify with clock output)
Starting condition is after half step is removed (CLKout2_HS = 0).

Figure 14. Relative Dynamic Digital Delay Programming Example—2nd Adjust

8.3.10 0-Delay Mode

When 0-delay mode is enabled the clock output selected by the Feedback Mux is connected to the PLL1 N counter to ensure a fixed phase relationship between the selected CLKin and the fed back CLKout. When all the clock outputs are synced together, all the clock outputs will share the same fixed phase relationship between the selected CLKin and the fed back CLKout. The feedback can be internal or external using FBCLKin port.

When 0-delay mode is enabled the lowest frequency clock output is fed back to the Feedback Mux to ensure a repeatable fixed CLKin to CLKout phase relationship between all clock outputs.

If a clock output that is not the lowest frequency output is selected for feedback, then clocks with lower frequencies will have an unknown phase relationship with respect the other clocks and clock input. There will be a number of possible phase relationships equal to Feedback_Clock_Frequency / Lower_Clock_Frequency that may occur.

The Feedback Mux can select a clock output of some of the clocks for internal feedback or the FBCLKin port for external 0-delay feedback.

To use 0-delay mode, the bit EN_FEEDBACK_MUX must be set (=1) to power up the feedback mux.

See *PLL Programming* for more information on programming PLL1_N for 0-delay mode.

When using an external VCO mode, internal 0-delay feedback must be used since the FBCLKin port is shared with the Fin input.

Table 11 outlines several registers to program for 0-delay mode.

Copyright © 2012–2017, Texas Instruments Incorporated

Table 11. Programming 0-Delay Mode

REGISTER	PURPOSE
MODE = 2 or 5	Select one of the 0-delay modes for device.
EN_FEEDBACK_MUX = 1	Enable feedback mux.
FEEDBACK_MUX = Application Specific	Select CLKout or FBCLKin for 0-delay feedback.
CLKoutX_DIV	The divide value of the clock selected by FEEDBACK_MUX is important for PLL2 N value calculation
PLL1_N	PLL1_N value used with CLKoutX_DIV in loop.

8.3.11 Hitless Switching

The LMK04906 supports hitless switching.

8.4 Device Functional Modes

8.4.1 Mode Selection

The LMK04906 family is capable of operating in several different modes as programmed by *MODE: Device Mode*.

Table 12. Device Mode Selection

MODE R11[31:27]	PLL1	PLL2	PLL2 VCO	0-DELAY	CLOCK DIST
0	X	X	Internal		X
2	X	X	Internal	X	X
3	X	X	External		X
5	X	X	External	X	X
6		X	Internal		X
8		X	Internal	X	X
11		X	External		X
16					X

In addition to selecting the device's mode of operation above, some modes require additional configuration. Also there are other features including holdover and dynamic digital delay that can also be enabled.

Table 13. Registers to Further Configure Device Mode of Operation

REGISTER	HOLDOVER	0-DELAY	DYNAMIC DIGITAL DELAY
HOLDOVER_MODE	2	—	—
EN_TRACK	User	—	—
DAC_CLK_DIV	User	—	—
EN_MAN_DAC	User	—	—
DISABLE_DLD1_DET	User	—	—
EN_VTUNE_RAIL_DET	User	—	—
DAC_HIGH_TRIP	User	—	—
DAC_LOW_TRIP	User	—	—
FORCE_HOLDOVER	0	—	—
SYNC_EN_AUTO	—	—	User
SYNC_QUAL	—	—	1
EN_SYNC	—	—	1
CLKout2_PD	—	—	0
EN_FEEDBACK_MUX	—	1	1

Copyright © 2012–2017, Texas Instruments Incorporated

Table 13. Registers to Further Configure Device Mode of Operation (continued)

REGISTER	HOLDOVER	0-DELAY	DYNAMIC DIGITAL DELAY
FEEDBACK_MUX	—	Feedback Clock	Qualifying Clock
NO_SYNC_ CLKoutX	—	—	User

8.4.2 Operating Modes

The LMK04906 is a flexible device that can be configured for many different use cases. The following simplified block diagrams help show the user the different use cases of the device.

8.4.2.1 Dual PLL

Figure 15 illustrates the typical use case of the LMK04906 in dual loop mode. In dual loop mode the reference to PLL1 is either CLKin0, CLKin1, or CLKin2. An external VCXO or tunable crystal will be used to provide feedback for the first PLL and a reference to the second PLL. This first PLL cleans the jitter with the VCXO or low cost tunable crystal by using a narrow loop bandwidth. The VCXO or tunable crystal output may be buffered through the OSCout0 port and optionally on up to 2 of the CLKouts. The VCXO or tunable crystal is used as the reference to PLL2 and may be doubled using the frequency doubler. The internal VCO drives up to six divide/delay blocks which drive 6 clock outputs.

Holdover functionality is optionally available when the input reference clock is lost. Holdover works by fixing the tuning voltage of PLL1 to the VCXO or tunable crystal.

It is also possible to use an external VCO in place of PLL2's internal VCO.

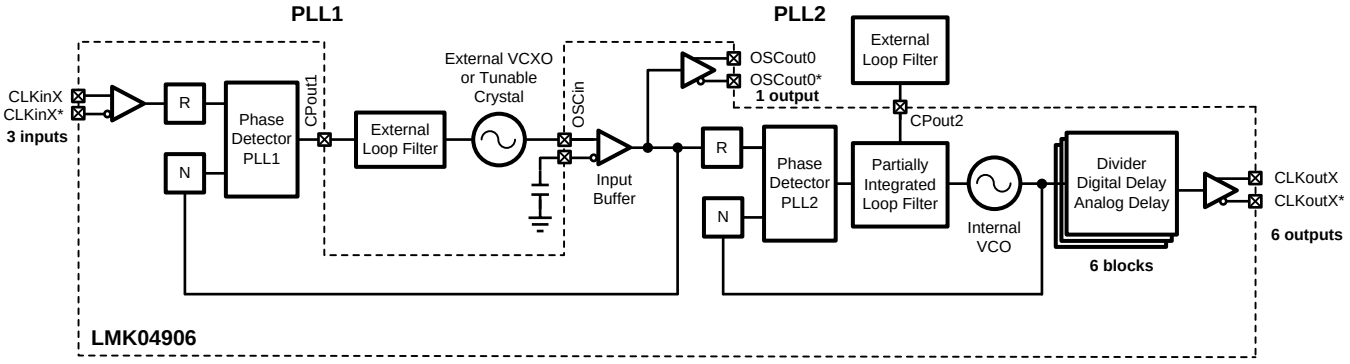

Copyright © 2016, Texas Instruments Incorporated

Figure 15. Simplified Functional Block Diagram for Dual Loop Mode

8.4.2.2 0-Delay Dual PLL

Figure 16 illustrates the use case of 0-delay dual loop mode. This configuration is very similar to *Dual PLL* except that the feedback to the first PLL is driven by a clock output. This causes the clock outputs to have deterministic phase with the clock input. Since all the clock outputs can be synchronized together, all the clock outputs can be in phase with the clock input signal. The feedback to PLL1 can be connected internally as shown, or externally using FBCLKin (CLKin1) as an input port.

It is also possible to use an external VCO in place of PLL2's internal VCO.

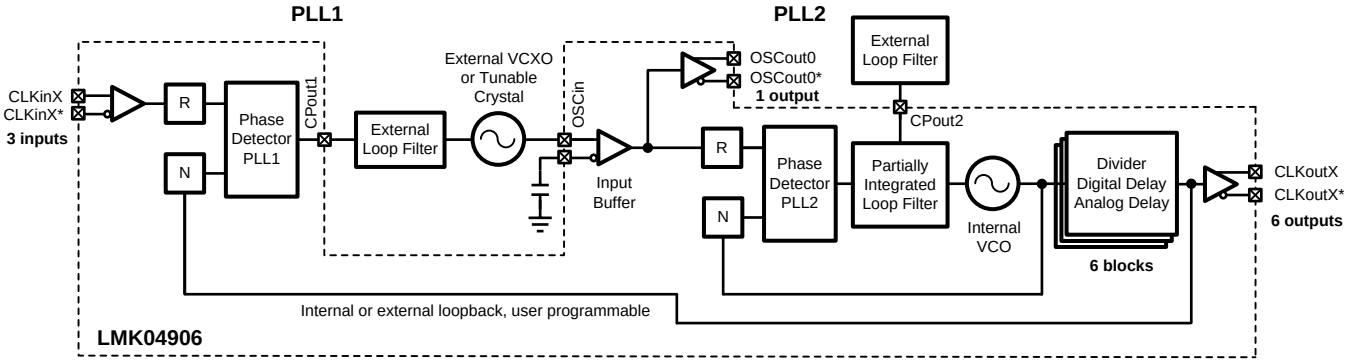

Figure 16. Simplified Functional Block Diagram for 0-delay Dual Loop Mode

8.4.2.3 Single PLL

Figure 17 illustrates the use case of single PLL mode. In single PLL mode only PLL2 is used and PLL1 is powered down. OSCin is used as the reference input. The internal VCO drives up to 6 divide/delay blocks which drive 6 clock outputs. The reference at OSCin can be used to drive the OSCout0 port. OSCin can also optionally drive up to 2 of the clock outputs.

It is also possible to use an external VCO in place of PLL2's internal VCO.

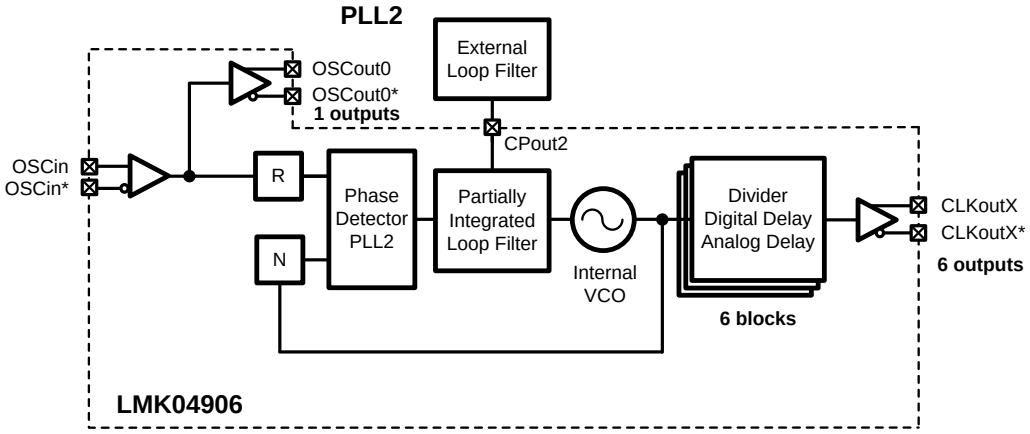

Figure 17. Simplified Functional Block Diagram for Single Loop Mode

8.4.2.4 0-delay Single PLL

Figure 18 illustrates the use case of 0-delay single PLL mode. This configuration is very similar to *Single PLL* except that the feedback to PLL2 comes from a clock output. This causes the clock outputs to be in phase with the reference input. Since all the clock outputs can be synchronized together, all the clock outputs can be in phase with the clock input signal. The feedback to PLL2 can be performed internally as shown, or externally using FBCLKin (CLKin1) as an input port.

It is also possible to use an external VCO in place of PLL2's internal VCO.

Copyright © 2012–2017, Texas Instruments Incorporated

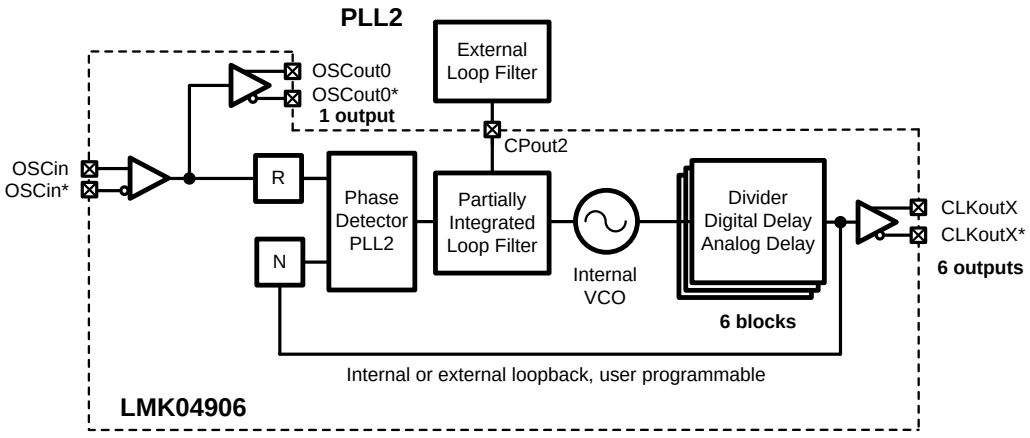

Figure 18. Simplified Functional Block Diagram for 0-delay Single Loop Mode

8.4.2.5 Clock Distribution

Figure 19 illustrates the LMK04906 used for clock distribution. CLKin1 is used to drive up to 6 divide/delay blocks which drive 6 outputs. OSCin can be used to drive the OSCout port. OSCin can also optionally drive up to 2 of the clock outputs.

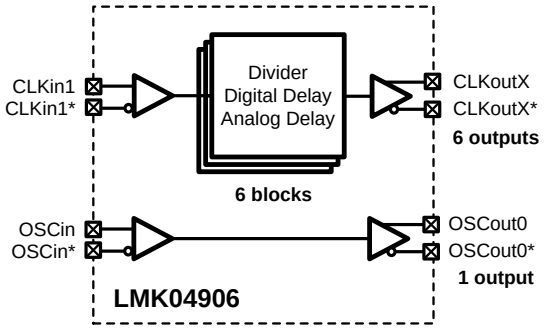

Figure 19. Simplified Functional Block Diagram for Mode Clock Distribution

8.5 Programming

LMK04906 devices are programmed using 32-bit registers. Each register consists of a 5-bit address field and 27-bit data field. The address field is formed by bits 0 through 4 (LSBs) and the data field is formed by bits 5 through 31 (MSBs). The contents of each register is clocked in MSB first (bit 31), and the LSB (bit 0) last. During programming, the LEuWire signal should be held *low*. The serial data is clocked in on the rising edge of the CLKuWire signal. After the LSB (bit 0) is clocked in the LEuWire signal should be toggled *low*-to-*high*-to-*low* to latch the contents into the register selected in the address field. It is recommended to program registers in numeric order, for example R0 to R16, and R24 to R31 to achieve proper device operation. Figure 6 illustrates the serial data timing sequence.

To achieve proper frequency calibration, the OSCin port must be driven with a valid signal before programming register R30. Changes to PLL2 R divider or the OSCin port frequency require register R30 to be reloaded in order to activate the frequency calibration process.

8.5.1 Special Programming Case for R0 to R5 for CLKoutX_DIV and CLKoutX_DDLY

In some cases when programming register R0 to R5 to change the CLKoutX_DIV divide value or CLKoutX_DDLY delay value, 3 additional CLKuWire cycles must occur after loading the register for the newly programmed divide or delay value to take effect. These special cases include:

- When CLKoutX_DIV is > 25.
- When CLKoutX_DDLY is > 12. Note, loading the digital delay value only prepares for a future SYNC event.

Copyright © 2012–2017, Texas Instruments Incorporated

Programming (continued)

Also, since SYNC_EN_AUTO bit = 1 automatically generates a SYNC on the falling edge of LE when R0 to R5 is programmed, further programming considerations must be made when SYNC_EN_AUTO = 1.

These special programming cases requiring the additional three clock cycles may be properly programmed by one of the following methods shown in Table 14.

Table 14. R0 to R5 Special Case

CLKoutX_DIV & CLKoutX_DDLY	SYNC_EN_AUTO	PROGRAMMING METHOD
CLKoutX_DIV ≤ 25 and CLKoutX_DDLY ≤ 12	0 or 1	No Additional Clocks Required (Normal)
CLKoutX_DIV > 25 or CLKoutX_DDLY > 12	0	Three Extra CLKuWire Clocks (Or program another register)
CLKoutX_DIV > 25 or CLKoutX_DDLY > 12	1	Three Extra CLKuWire Clocks while LEuWire is High

Method: No Additional Clocks Required (Normal)

No special consideration to CLKuWire is required when changing divide value to ≤ 25, digital delay value to ≤ 12, or when the digital delay and divide value do not change. See MICROWIRE timing Figure 6.

Method: Three Extra CLKuWire Clocks

Three extra clocks must be provided before CLKoutX_DIV > 25 or CLKoutX_DDLY > 12 take effect. See MICROWIRE timing Figure 7.

Also, by programming another register the three clock requirement can be satisfied.

Method: Three Extra CLKuWire Clocks with LEuWire Asserted

When SYNC_EN_AUTO = 1 the falling edge of LEuWire will generate a SYNC event. CLKoutX_DIV and CLKoutX_DDLY values must be updated before the SYNC event occurs. So 3 CLKuWire rising edges must occur before LEuWire goes low. See MICROWIRE timing Figure 8.

Initial Programming Sequence

During the recommended programming sequence the device is programmed in order from R0 to R31, so it is expected at least one additional register will be programmed after programming the last CLKoutX_DIV or CLKoutX_DDLY value in R0 to R5. This will result in the extra needed CLKuWire rising edges, so this special note is of little concern.

If programming R0 to R5 to change CLKout frequency or digital delay or dynamic digital delay at a later time in the application, care must be taken to provide these extra CLKuWire cycles to properly load the new divide and/or delay values.

8.5.1.1 Example

In this example, all registers have been programmed, the PLLs are locked. An LMK04906 has been generating a clock output frequency of 61.44 MHz on CLKout4 using a VCO frequency of 2457.6 MHz and a divide value of 40. SYNC_EN_AUTO = 0. At a later time the application requires a 30.72 MHz output on CLKout4. By reprogramming register R4 with CLKout4_DIV = 80 twice, the divide value of 80 is set for clock output 4 which results in an output frequency of 30.72 MHz (2457.6 MHz / 80 = 30.72 MHz) on CLKout4.

In this example the required 3 CLKuWire cycles were achieved by reprogramming the R4 register with the same value twice.

8.5.2 Recommended Programming Sequence

Registers are programmed in numeric order with R0 being the first and R31 being the last register programmed. The recommended programming sequence involves programming R0 with the reset bit (b17) set to 1 to ensure the device is in a default state. If R0 is programmed again, the reset bit must be cleared to 0 during the programming of R0.

Copyright © 2012–2017, Texas Instruments Incorporated

8.5.2.1 Overview

- Program R0 with RESET bit = 1. This ensures that the device is configured with default settings. When RESET = 1, all other R0 bits are ignored.
  - If R0 is programmed again during the initial configuration of the device, the RESET bit must be cleared.
- R0 through R5: CLKouts.
  - Program as necessary to configure the clock outputs, CLKout0 to CLKout5 as desired. These registers configure clock output controls such as powerdown, digital delay and divider value, analog delay select, and clock source select.
- R6 through R8: CLKouts.
  - Program as necessary to configure the clock outputs, CLKout0 to CLKout5 as desired. These registers configure the output format for each clock outputs and the analog delay for the clock outputs.
- R9: Required programming
  - Program this register as shown in the register map for proper operation.
- R10: OSCouts, VCO divider, and 0-delay.
  - Enable and configure clock outputs OSCout0/1.
  - Set and select VCO divider (VCO bypass is recommended).
  - Set 0-delay feedback source if used.
- R11: Part mode, SYNC, and XTAL.
  - Program to configure the mode of the part, to configure SYNC functionality and pin, and to enable crystal mode.
- R12: Pins, SYNC, and holdover mode.
  - Status_LD pin, more SYNC options to generate a SYNC upon PLL1 and/or PLL2 lock detect.
  - Enable clock features such as holdover.
- R13: Pins, holdover mode, and CLKins.
  - Status_HOLDOVER, Status_CLKin0, and Status_CLKin1 pin controls.
  - Enable clock inputs for use in specific part modes.
- R14: Pins, LOS, CLKins, and DAC.
  - Status_CLKin1 pin control.
  - Loss of signal detection, CLKin type, DAC rail detect enable and high and low trip points.
- R15: DAC and holdover mode.
  - Program to enable and set the manual DAC value.
  - HOLDOVER mode options.
- R16: Crystal amplitude.
  - Increasing XTAL_LVL can improve tunable crystal phase noise performance.
- R24: PLL1 and PLL2.
  - PLL1 N and R delay and PLL1 digital lock delay value.
  - PLL2 integrated loop filter.
- R25: DAC and PLL1.
  - Program to configure DAC update clock divider and PLL1 digital lock detect count.
- R26: PLL2.
  - Program to configure PLL2 options.
- R27: CLKins and PLL1.
  - Clock input pre-dividers.
  - Program to configure PLL1 options.
- R28: PLL1 and PLL2.
  - Program to configure PLL2 R and PLL1 N.
- R29: OSCin and PLL2.
  - Program to configure oscillator input frequency, PLL2 fast phase detector frequency mode, and PLL2 N calibration value.
- R30: PLL2.

Copyright © 2012–2017, Texas Instruments Incorporated

  - Program to configure PLL2 prescaler and PLL2 N value.
- R31: uWire lock.
  - Program to set the uWire_LOCK bit.

8.5.3 Readback

At no time should the MICROWIRE registers be programmed to any value other than what is specified in the datasheet.

For debug of the MICROWIRE interface, it is recommended to simply program an output pin mux to active low and then toggle the output type register between output and inverting output while observing the output pin for a low to high transition. For example, to verify MICROWIRE programming, set the LD_MUX = 0 (Low) and then toggle the LD_TYPE register between 3 (Output, push-pull) and 4 (Output inverted, push-pull). The result will be that the Status_LD pin will toggle from low to high.

Readback from the MICROWIRE programming registers is available. The MICROWIRE readback function can be enabled on the Status_LD, Status_HOLDOVER, Status_CLKin0, Status_CLKin1, or SYNC pin by programming the corresponding MUX register to “uWire Readback” and the corresponding TYPE register to "Output (push-pull)." Power on reset defaults the Status_HOLDOVER pin to “uWire Readback.”

Figure 9 illustrates the serial data timing sequence for a readback operation for both cases of READBACK_LE = 0 (POR default) and READBACK_LE = 1.

To perform a readback operation first set the register to be read back by programming the READBACK_ADDR register. Then after any MICROWIRE write operation, with the LEuWire pin held low continue to clock the CLKuWire pin. On every rising edge of the CLKuWire pin a new data bit is clocked onto the any pins programmed for uWire Readback. If the READBACK_LE bit is set, the LEuWire pin should be left high after LEuWire rising edge while continuing to clock the CLKuWire pin.

It is allowable to perform a register read back in the same MICROWIRE operation which set the READBACK_ADDR register value.

Data is clocked out MSB first. After 27 clocks all the data values will have been read and the read operation is complete. If READBACK_LE = 1, the LEuWire line may now be lowered. It is allowable for the CLKuWire pin to be clocked additional cycles, but the data on the readback pin will be invalid.

CLKuWire must be low before the falling edge of LEuWire.

8.5.3.1 Readback - Example

To readback register R3 perform the following steps:

- Write R31 with READBACK_ADDR = 3; READBACK_LE = 0. DATAuWire and CLKuWire are toggled as shown in Figure 6 with new data being clocked in on rising edges of CLKuWire
- Toggle LEuWire high and then low as shown in Figure 6 and Figure 9. LEuWire is returned low because READBACK_LE = 0.
- Toggle CLKuWire high and then low 27 times to read back all 27 bits of register R3. Data is read MSB first. Data is valid on falling edge of CLKuWire.
- Read operation is complete.

8.6 Register Maps

8.6.1 Register Map and Readback Register Map

Table 15 provides the register map for device programming. Normally any register can be read from the same data address it is written to. However, READBACK_LE has a **different readback address**. Also, the DAC_CNT register is a read only register. Table 16 shows the address for READBACK_LE and DAC_CNT. Bits marked as reserved are undefined upon readback.

Observe that only the DATA bits are readback during a readback which can result in an offset of 5 bits between the two register tables.

Copyright © 2012–2017, Texas Instruments Incorporated

Table 15. Register Map Description

Register	31	30	29	28	27	26	25	24	23	22	21	20	19	18	17	16	15	14	13	12	11	10	9	8	7	6	5	4	3	2	1	0
	Data [26:0]																											Address [4:0]				
R0	CLKout 0_PD	0	CLKout0_ ADLY_SEL	0	CLKout0_DDLY [27:18]												RESET	CLKout 0_HS	CLKout0_DIV [15:5]										0	0	0	0	0
R1	CLKout 1_PD	0	0	CLKout1_ ADLY_SEL	CLKout1_DDLY [27:18]											POWERDOWN	CLKout 1_HS	CLKout1_DIV [15:5]										0	0	0	0	1
R2	CLKout 2_PD	0	CLKout2_ ADLY_SEL	0	CLKout2_DDLY [27:18]										0	CLKout 2_HS	CLKout2_DIV [15:5]										0	0	0	1	0
R3	CLKout 3_PD	CLKout3_ OSCin_Sel	0	CLKout3_ ADLY_SEL	CLKout3_DDLY [27:18]										0	CLKout 3_HS	CLKout3_DiV [15:5]										0	0	0	1	1
R4	CLKout 4_PD	C0LKout4_ OSCin_Sel	0	CLKout4_ ADLY_SEL	CLKout4_DDLY [27:18]										0	CLKout 4_HS	CLKout4_DIV [15:5]										0	0	1	0	0
R5	CLKout 5_PD	0	0	CLKout5 ADLY_SEL	CLKout5_DDLY [27:18]										0	CLKout 5_HS	CLKout5_DIV [15:5]										0	0	1	0	1
R6	0				CLKout1_TYPE [27:24]				CLKout0_TYPE [23:20]				0				CLKout1_ADLY [15:11]					0	CLKout0_ADLY [9:5]				0	0	1	1	0
R7	0				CLKout3_TYPE [27:24]				CLKout2_TYPE [23:20]				0				CLKout3_ADLY [15:11]					0	CLKout2_ADLY [9:5]				0	0	1	1	1

Copyright © 2012–2017, Texas Instruments Incorporated

Table 15. Register Map Description (continued)

Register	31	30	29	28	27	26	25	24	23	22	21	20	19	18	17	16	15	14	13	12	11	10	9	8	7	6	5	4	3	2	1	0
	Data [26:0]																											Address [4:0]				
R8	0				CLKout5_TYPE [27:24]				0				CLKout4_TYPE [19:16]				CLKout5_ADLY [15:11]					0	CLKout4_ADLY [9:5]					0	1	0	0	0
R9	0	**1**	0	**1**	0	**1**	0	**1**	0	**1**	0	**1**	0	**1**	0	**1**	0	**1**	0	**1**	0	**1**	0	**1**	0	**1**	0	0	1	0	0	1
R10	0	0	0	**1**	OSCout0_TYPE [27:24]				0	EN_OSCout0	0	OSCout0_MUX	PD_OSCin	OSCout_DIV [18:16]			0	**1**	0	VCO_MUX	EN_FEEDBACK_MUX	VCO_DIV [10:8]			FEEDBACK _MUX [7:5]			0	1	0	1	0
R11	MODE [31:27]					EN_SYNC	NO_SYNC_CLKout5	NO_SYNC_CLKout4	NO_SYNC_CLKout3	NO_SYNC_CLKout2	NO_SYNC_CLKout1	NO_SYNC_CLKout0	SYNC _CLKin2_ MUX [19:18]		SYNC_QUAL	SYNC_POL_INV	SYNC_EN_AUTO	SYNC _TYPE [14:12]			0	0	0	0	0	0	EN_PLL2_XTAL	0	1	0	1	1
R12	LD_MUX [31:27]				LD_TYPE [26:24]				SYNC_PLL2 _DLD	SYNC_PLL1 _DLD	0 (1)	0	**1**	**1**	0	0	0	0	0	0	0	0	0	EN_TRACK	HOLDOVER _MODE [7:6]		1	0	1	1	0	0
R13	HOLDOVER_MUX [31:27]				HOLDOVER _TYPE [26:24]				0	Status_ CLKin1 _MUX [22:20]			0	Status_ CLKin0 _TYPE [18:16]			DISABLE_ DLD1_DET	Status_ CLKin0 _MUX [14:12]			CLKin _Select _MODE [11:8]			CLKin_Sel_INV	EN_CLKin2	EN_CLKin1	EN_CLKin0	0	1	1	0	1
R14	LOS_ TIMEOUT [31:30]		0	EN_LOS	0	Status_ CLKin1 _TYPE [26:24]			0	CLKin2_BUF_TYPE	CLKin1_BUF_TYPE	CLKin0_BUF_TYPE	DAC_HIGH_TRIP [19:14]					0	0	DAC_LOW_TRIP [11:6]						EN_VTUNE_ RAIL_DET	0	1	1	1	0

(1) Although the value of 0 is written here, during readback the value of READBACK_LE will be read at this location. See Register Map and Readback Register Map.

Copyright © 2012–2017, Texas Instruments Incorporated

Table 15. Register Map Description (continued)

Register	31	30	29	28	27	26	25	24	23	22	21	20	19	18	17	16	15	14	13	12	11	10	9	8	7	6	5	4	3	2	1	0
	Data [26:0]																											Address [4:0]				
R15	MAN_DAC [31:22]										0	EN_MAN_DAC	HOLDOVER_DLD_CNT [19:6]														FORCE_ HOLDOVER	0	1	1	1	1
R16	XTAL_ LVL		0	0	0	0	0	**1**	0	**1**	0	**1**	0	**1**	0	**1**	0	0	0	0	0	**1**	0	0	0	0	0	1	0	0	0	0
R24	PLL2_C4_LF [31:28]				PLL2_C3_LF [27:24]				0	PLL2_R4_LF [22:20]			0	PLL2_R3_LF [18:16]			0	PLL1_N_DLY [14:12]			0	PLL1_R_DLY [10:8]			PLL1_ WND_ SIZE		0	1	1	0	0	0
R25	DAC_CLK_DIV [31:22]										0	0	PLL1_DLD_CNT [19:6]														0	1	1	0	0	1
R26	PLL2_ WND_SIZE [31:30]		EN_PLL2_ REF_2X	PLL2_ CP_POL	PLL2_CP _GAIN [27:26]		**1**	**1**	**1**	0	**1**	0	PLL2_DLD_CNT [19:6]														PLL2_CP_TRI	1	1	0	1	0
R27	0	0	0	PLL1_CP_POL	PLL1_CP_GAIN		CLKin2_ PreR_DIV		CLKin1_ PreR_DIV		CLKin0_ PreR_DIV		PLL1_R [19:6]														PLL1_CP_TRI	1	1	0	1	1
R28	PLL2_R												PLL1_N [19:6]														0	1	1	1	0	0
R29	0	0	0	0	0	OSCin_FREQ [26:24]			PLL2_ FAST_PDF	PLL2_N_CAL [22:5]																		1	1	1	0	1
R30	0	0	0	0	0	PLL2_P			0	PLL2_N [22:5]																		1	1	1	1	0
R31	0	0	0	0	0	0	0	0	0	0	READBACK_ LE	READBACK_ADDR [20:16]					0	0	0	0	0	0	0	0	0	0	uWire_LOCK	1	1	1	1	1

Table 16. Readback Register Map

Register	RD 26	RD 25	RD 24	RD 23	RD 22	RD 21	RD 20	RD 19	RD 18	RD 17	RD 16	RD 15	RD 14	RD 13	RD 12	RD 11	RD 10	RD 9	RD 8	RD 7	RD 6	RD 5	RD 4	RD 3	RD 2	RD 1	RD 0
	Data [26:0]																										
RD R12	LD_MUX [26:22]					LD_TYPE [21:19]			SYNC_PLL2_DLD	SYNC_PLL1_DLD	READBACK_LE	0	**1**	**1**	0	0	0	0	0	0	0	0	0	EN_TRACK	HOLDOVER_MODE [2:1]		1
RD R23	RESERVED [26:24]			**DAC_CNT [23:14]**										RESERVED [13:0]													
RD R31	RESERVED [26:10]																										uWire_LOCK

Copyright © 2012–2017, Texas Instruments Incorporated

8.6.2 Default Device Register Settings After Power On Reset

Table 17 illustrates the default register settings programmed in silicon for the LMK04906 after power on or asserting the reset bit. Capital X and Y represent numeric values.

Table 17. Default Device Register Settings After Power On Reset

GROUP	FIELD NAME	DEFAULT VALUE (DECIMAL)	DEFAULT STATE	FIELD DESCRIPTION	REGISTER	BIT LOCATION (MSB:LSB)
Clock Output Control	CLKout0_PD	1	PD	Powerdown control for analog and digital delay, divider, and both output buffers	R0	31
	CLKout1_PD	1	PD		R1	
	CLKout2_PD	1	PD		R2	
	CLKout3_PD	0	Normal		R3	
	CLKout4_PD	0	Normal		R4	
	CLKout5_PD	1	PD		R5	
	CLKout3_OSCin_Sel	1	OSCin	Selects the clock source for a clock output from internal VCO or external OSCin	R3	30
	CLKout4_OSCin_Sel	0	VCO		R4	30
	CLKoutX_ADLY_SEL	0	None	Add analog delay for clock output	R0 to R5	28, 29
	CLKoutX_DDLY	0	5	Digital delay value	R0 to R5	27:18 [10]
	RESET	0	Not in reset	Performs power on reset for device	R0	17
	POWERDOWN	0	Disabled (device is active)	Device power down control	R1	17
	CLKoutX_HS	0	No shift	Half shift for digital delay	R0 to R5	16
	CLKout0_DIV	25	Divide-by-25	Divide for clock outputs	R0	15:5 [11]
	CLKout1_DIV	25	Divide-by-25		R1	
	CLKout2_DIV	25	Divide-by-25		R2	
	CLKout3_DIV	1	Divide-by-1		R3	
	CLKout4_DIV	25	Divide-by-25		R4	
	CLKout5_DIV	25	Divide-by-25		R5	
	CLKout1_TYPE	0	Powerdown	Individual clock output format. Select from LVDS/LVPECL/LVCMOS.	R6	27:24 [4]
	CLKout3_TYPE	8	LVCMOS (Norm/Norm)		R7	
	CLKout5_TYPE	0	Powerdown		R8	
	CLKout0_TYPE	0	Powerdown		R6	23:20 [4]
	CLKout2_TYPE	0	Powerdown		R7	
	CLKout4_TYPE	1	LVDS		R8	19:16 [4]
	CLKoutX_ADLY	0	No delay	Analog delay setting for clock output	R6 to R8	15:11, 9:5 [5]
	OSCout0_TYPE	1	LVDS	OSCout0 default clock output	R10	27:24 [4]
	EN_OSCout0	1	Enabled	Enable OSCout0 output buffer	R10	22
	OSCout0_MUX	0	Bypass Divider	Select OSCout divider for OSCout0 or bypass	R10	20
	PD_OSCin	0	OSCin powered	Allows OSCin to be powered down. For use in clock distribution mode.	R10	19
	OSCout_DIV	0	Divide-by-8	OSCout divider value	R10	18:16 [3]
Mode	VCO_MUX	0	VCO	Select VCO or VCO Divider output	R10	12
	EN_FEEDBACK_MUX	0	Disabled	Feedback MUX is powered down.	R10	11
	VCO_DIV	2	Divide-by-2	VCO Divide value	R10	10:8 [3]
	FEEDBACK_MUX	0	CLKout0	Selects CLKout to feedback into the PLL1 N divider	R10	7:5 [3]
	MODE	0	Internal VCO	Device mode	R11	31:27 [5]

Copyright © 2012–2017, Texas Instruments Incorporated

Table 17. Default Device Register Settings After Power On Reset (continued)

GROUP	FIELD NAME	DEFAULT VALUE (DECIMAL)	DEFAULT STATE	FIELD DESCRIPTION	REGISTER	BIT LOCATION (MSB:LSB)
Clock Synchronization	EN_SYNC	1	Enabled	Enables synchronization circuitry.	R11	26
	NO_SYNC_CLKout5	0	Will sync	Disable individual clock output from becoming synchronized.	R11	25
	NO_SYNC_CLKout4	1	Will not sync		R11	24
	NO_SYNC_CLKout3	1	Will not sync		R11	23
	NO_SYNC_CLKout2	0	Will sync		R11	22
	NO_SYNC_CLKout1	0	Will sync		R11	21
	NO_SYNC_CLKout0	0	Will sync		R11	20
	SYNC_CLKin2_MUX	0	Logic Low	Mux controlling SYNC pin when set to output	R11	19:18 [2]
	SYNC_QUAL	0	Not qualified	Allows SYNC operations to be qualified by a clock output.	R11	17
	SYNC_POL_INV	1	Logic Low	Sets the polarity of the SYNC pin when input	R11	16
	SYNC_EN_AUTO	0	Manual	SYNC is not started by programming a register R0 to R5.	R11	15
	SYNC_TYPE	1	Input /w Pull-up	SYNC IO pin type	R11	14:12 [3]
Other Mode Control	EN_PLL2_XTAL	0	Disabled	Enable Crystal oscillator for OSCin	R11	5
	LD_MUX	3	PLL1 & 2 DLD	Lock detect mux selection when output	R12	31:27 [5]
	LD_TYPE	3	Output (Push-Pull)	LD IO pin type	R12	26:24 [3]
	SYNC_PLL2_DLD	0	Normal	Force synchronization mode until PLL2 locks	R12	23
	SYNC_PLL1_DLD	0	Normal	Force synchronization mode until PLL1 locks	R12	22
	EN_TRACK	1	Enable Tracking	DAC tracking of the PLL1 tuning voltage	R12	8
	HOLDOVER_MODE	2	Enable Holdover	Causes holdover to activate when lock is lost	R12	7:6 [2]
	HOLDOVER_MUX	7	uWire Readback	Holdover mux selection	R13	31:27 [5]
	HOLDOVER_TYPE	3	Output (Push-Pull)	HOLDOVER IO pin type	R13	26:24 [3]
	Status_CLKin1_MUX	0	Logic Low	Status_CLKin1 pin MUX selection	R13	22:20 [3]
	Status_CLKin0_TYPE	2	Input /w Pull-down	Status_CLKin0 IO pin type	R13	18:16 [3]
	DISABLE_DLD1_DET	0	Not Disabled	Disables PLL1 DLD falling edge from causing HOLDOVER mode to be entered	R13	15
	Status_CLKin0_MUX	0	Logic Low	Status_CLKin0 pin MUX selection	R13	14:12 [3]
	CLKin_SELECT_MODE	3	Manual Select	Mode to use in determining reference CLKin for PLL1	R13	11:9 [3]
	CLKin_Sel_INV	0	Active High	Invert Status 0 and 1 pin polarity for input	R13	8
CLKin Control	EN_CLKin2	1	Usable	Set CLKin2 to be usable	R13	7
	EN_CLKin1	1	Usable	Set CLKin1 to be usable	R13	6
	EN_CLKin0	1	Usable	Set CLKin0 to be usable	R13	5
	LOS_TIMEOUT	0	1200 ns, 420 kHz	Time until no activity on CLKin asserts LOS	R14	31:30 [2]
	EN_LOS	1	Enabled	Loss of Signal Detect at CLKin	R14	28
	Status_CLKin1_TYPE	2	Input /w Pull-down	Status_CLKin1 pin IO pin type	R14	26:24 [3]
	CLKin2_BUF_TYPE	0	Bipolar	CLKin2 Buffer Type	R14	22
	CLKin1_BUF_TYPE	0	Bipolar	CLKin1 Buffer Type	R14	21
	CLKin0_BUF_TYPE	0	Bipolar	CLKin0 Buffer Type	R14	20
DAC Control	DAC_HIGH_TRIP	0	~50 mV from Vcc	Voltage from Vcc at which holdover mode is entered if EN_VTUNE_RAIL_DAC is enabled.	R14	19:14 [6]
	DAC_LOW_TRIP	0	~50 mV from GND	Voltage from GND at which holdover mode is entered if EN_VTUNE_RAIL_DAC is enabled.	R14	11:6 [6]
	EN_VTUNE_RAIL_DET	0	Disabled	Enable PLL1 unlock state when DAC trip points are achieved	R14	5
	MAN_DAC	512	3 V / 2	Writing to this register will set the value for DAC when in manual override. Readback from this register is DAC value.	R15	31:22 [10]
	EN_MAN_DAC	0	Disabled	Set manual DAC override	R15	20
	HOLDOVER_DLD_CNT	512	512 counts	Lock must be valid n many clocks of PLL1 PDF before holdover mode is exited.	R15	19:6 [14]
	FORCE_HOLDOVER	0	Holdover not forced	Forces holdover mode.	R15	5
	XTAL_LVL	0	1.65 Vpp	Sets drive power level of Crystal	R16	31:30 [2]

Copyright © 2012–2017, Texas Instruments Incorporated

Table 17. Default Device Register Settings After Power On Reset (continued)

GROUP	FIELD NAME	DEFAULT VALUE (DECIMAL)	DEFAULT STATE	FIELD DESCRIPTION	REGISTER	BIT LOCATION (MSB:LSB)
PLL Control	PLL2_C4_LF	0	10 pF	PLL2 integrated capacitor C4 value	R24	31:28 [4]
	PLL2_C3_LF	0	10 pF	PLL2 integrated capacitor C3 value	R24	27:24 [4]
	PLL2_R4_LF	0	200 Ω	PLL2 integrated resistor R4 value	R24	22:20 [3]
	PLL2_R3_LF	0	200 Ω	PLL2 integrated resistor R3 value	R24	18:16 [3]
	PLL1_N_DLY	0	No delay	Delay in PLL1 feedback path to decrease lag from input to output	R24	14:12 [3]
	PLL1_R_DLY	0	No delay	Delay in PLL1 reference path to increase lag from input to output	R24	10:8 [3]
	PLL1_WND_SIZE	3	40 ns	Window size used for digital lock detect for PLL1	R24	7:6 [2]
	DAC_CLK_DIV	4	Divide-by-4	DAC update clock divisor. Divides PLL1 phase detector frequency.	R25	31:22 [10]
	PLL1_DLD_CNT	1024	1024 cycles	Lock must be valid n many cycles before LD is asserted	R25	19:6 [14]
	PLL2_WND_SIZE	0	Reserved (1)	Window size used for digital lock detect for PLL2	R26	31:30 [2]
	EN_PLL2_REF_2X	0	Disabled, 1x	Doubles reference frequency of PLL2.	R26	29
	PLL2_CP_POL	0	Negative	Polarity of PLL2 Charge Pump	R26	28
	PLL2_CP_GAIN	3	3.2 mA	PLL2 Charge Pump Gain	R26	27:26 [2]
	PLL2_DLD_CNT	8192	8192 Counts	Number of PDF cycles which phase error must be within DLD window before LD state is asserted.	R26	19:6 [14]
	PLL2_CP_TRI	0	Active	PLL2 Charge Pump Active	R26	5
	PLL1_CP_POL	1	Positive	Polarity of PLL1 Charge Pump	R27	28
	PLL1_CP_GAIN	0	100 uA	PLL1 Charge Pump Gain	R27	27:26 [2]
	CLKin2_PreR_DIV	0	Divide-by-1	CLKin2 Pre-R divide value (1, 2, 4, or 8)	R27	25:24 [2]
	CLKin1_PreR_DIV	0	Divide-by-1	CLKin1 Pre-R divide value (1, 2, 4, or 8)	R27	23:22 [2]
	CLKin0_PreR_DIV	0	Divide-by-1	CLKin0 Pre-R divide value (1, 2, 4, or 8)	R27	21:20 [2]
	PLL1_R	96	Divide-by-96	PLL1 R Divider (1 to 16383)	R27	19:6 [14]
	PLL1_CP_TRI	0	Active	PLL1 Charge Pump Active	R27	5
	PLL2_R	4	Divide-by-4	PLL2 R Divider (1 to 4095)	R28	31:20 [12]
	PLL1_N	192	Divide-by-192	PLL1 N Divider (1 to 16383)	R28	19:6 [14]
	OSCin_FREQ	7	448 to 511 MHz	OSCin frequency range	R29	26:24 [3]
	PLL2_FAST_PDF	1	PLL2 PDF > 100 MHz	When set, PLL2 PDF of greater than 100 MHz may be used	R29	23
	PLL2_N_CAL	48	Divide-by-48	Must be programmed to PLL2_N value.	R29	22:5 [18]
	PLL2_P	2	Divide-by-2	PLL2 N Divider Prescaler (2 to 8)	R30	26:24 [3]
	PLL2_N	48	Divide-by-48	PLL2 N Divider (1 to 262143)	R30	22:5 [18]
	READBACK_LE	0	LEuWire Low for Readback	State LEuWire pin must be in for readback	R31	21
	READBACK_ADDR	31	Register 31	Register to read back	R31	20:16 [5]
	uWire_LOCK	0	Writable	The values of registers R0 to R30 are lockable	R31	5

(1) This register must be reprogrammed to a value of 2 (3.7 ns) during user programming.

8.6.3 Register Descriptions

8.6.3.1 Register R0 to R5

Registers R0 through R5 control the 6 clock outputs CLKout0 to CLKout5. Register R0 controls CLKout0, Register R1 controls CLKout1, and so on. All functions of the bits in these six registers are identical except the different registers control different clock outputs. The X in CLKoutX_PD, CLKoutX_ADLY_SEL, CLKoutX_DDLY, CLKoutX_HS, CLKoutX_DIV denote the actual clock output which may be from 0 to 5.

The RESET bit is only in register R0.

The POWERDOWN bit is only in register R1.

The CLKoutX_OSCin_Sel bit is only in registers R3 and R4.

8.6.3.1.1 CLKoutX_PD, Powerdown CLKoutX Output Path

This bit powers down the clock output as specified by CLKoutX. This includes the divider, digital delay, analog delay, and output buffers.

Table 18. CLKoutX_PD

R0-R5[31]	STATE
0	Power up clock output
1	Power down clock output

8.6.3.1.2 CLKoutX_OSCin_Sel, Clock Output Source

This bit sets the source for the clock CLKoutX. The selected source will be either from a VCO via Mode Mux1 or from the OSCin buffer.

This bit is valid only for registers R3 and R4, clock outputs CLKout3 and CLKout4 respectively. All other clock outputs are driven by a VCO via Mode Mux1.

Table 19. CLKoutX_OSCin_Sel

R3-R4[30]	CLOCK OUTPUT SOURCE
0	VCO
1	OSCin

8.6.3.1.3 CLKoutX_ADLX_SEL[29], CLKoutX_ADLX_SEL[28], Select Analog Delay

These bits individually select the analog delay block (*CLKoutX_ADLY*) for use with CLKoutX. If a clock output does not use analog delay, the analog delay block is powered down.

Table 20. CLKoutX_ADLX_SEL[29], CLKoutX_ADLX_SEL[28]

R0-R5[28],[29]	STATE
0	Analog delay powered down
1	Analog delay on CLKoutX

8.6.3.1.4 CLKoutX_DDLY, Clock Channel Digital Delay

CLKoutX_DDLY and CLKoutX_HS sets the digital delay used for CLKoutX. This value only takes effect during a SYNC event and if the NO_SYNC_CLKoutX bit is cleared for this clock output. See *Clock Output Synchronization (SYNC)*.

Programming CLKoutX_DDLY can require special attention. See section *Special Programming Case for R0 to R5 for CLKoutX_DIV and CLKoutX_DDLY* for more details.

Using a CLKoutX_DDLY value of 13 or greater will cause the clock output to operate in extended mode regardless of the clock ouptut's divide value or the half step value.

One clock cycle is equal to the period of the clock distribution path. The period of the clock distribution path is equal to VCO Divider value divided by the frequency of the VCO. If the VCO divider is disabled or an external VCO is used, the VCO divide value is treated as 1.

$t_{clock\ distribution\ path}$ = VCO divide value / f_{VCO}

Copyright © 2012–2017, Texas Instruments Incorporated

Table 21. CLKoutX_DDLY, 10 Bits

R0-R5[27:18]	DELAY	POWER MODE
0 (0x00)	5 clock cycles	Normal Mode
1 (0x01)	5 clock cycles	
2 (0x02)	5 clock cycles	
3 (0x03)	5 clock cycles	
4 (0x04)	5 clock cycles	
5 (0x05)	5 clock cycles	
6 (0x06)	6 clock cycles	
7 (0x07)	7 clock cycles	
...	...	
12 (0x0C)	12 clock cycles	
13 (0x0D)	13 clock cycles	Extended Mode
...	...	
520 (0x208)	520 clock cycles	
521 (0x209)	521 clock cycles	
522 (0x20A)	522 clock cycles	

8.6.3.1.5 Reset

The RESET bit is located in register R0 only. Setting this bit will cause the silicon default values to be loaded. When programming register R0 with the RESET bit set, all other programmed values are ignored. After resetting the device, the register R0 must be programmed again (with RESET = 0) to set non-default values in register R0.

The reset occurs on the falling edge of the LEuWire pin which loaded R0 with RESET = 1.

The RESET bit is automatically cleared upon writing any other register. For instance, when R0 is written to again with default values.

Table 22. RESET

R0[17]	STATE
0	Normal operation
1	Reset (automatically cleared)

8.6.3.1.6 POWERDOWN

The POWERDOWN bit is located in register R1 only. Setting the bit causes the device to enter powerdown mode. Normal operation is resumed by clearing this bit with MICROWIRE.

Table 23. POWERDOWN

R1[17]	STATE
0	Normal operation
1	Powerdown

8.6.3.1.7 CLKoutX_HS, Digital Delay Half Shift

This bit subtracts a half clock cycle of the clock distribution path period to the digital delay of CLKoutX. CLKoutX_HS is used together with CLKoutX_DDLY to set the digital delay value.

When changing CLKoutX_HS, the digital delay immediately takes effect without a SYNC event.

Table 24. CLKoutX_HS

R0-R5[16]	STATE
0	Normal
1	Subtract half of a clock distribution path period from the total digital delay

Copyright © 2012–2017, Texas Instruments Incorporated

8.6.3.1.8 CLKoutX_DIV, Clock Output Divide

CLKoutX_DIV sets the divide value for the clock output. The divide may be even or odd. Both even and odd divides output a 50% duty cycle clock.

Using a divide value of 26 or greater will cause the clock output to operate in extended mode regardless of the clock output's digital delay value.

Programming CLKoutX_DIV can require special attention. See section *Special Programming Case for R0 to R5 for CLKoutX_DIV and CLKoutX_DDLY* for more details.

Table 25. CLKoutX_DIV, 11 Bits

R0-R5[15:5]	DIVIDE VALUE	POWER MODE
0 (0x00)	Reserved	Normal Mode
1 (0x01)	1 (1)	
2 (0x02)	2 (2)	
3 (0x03)	3	
4 (0x04)	4 (2)	
5 (0x05)	5 (2)	
6 (0x06)	6	
...	...	
24 (0x18)	24	
25 (0x19)	25	
26 (0x1A)	26	Extended Mode
27 (0x1B)	27	
...	...	
1044 (0x414)	1044	
1045 (0x415)	1045	

(1) CLKoutX_HS must = 0 for divide by 1.
(2) After programming PLL2_N value, a SYNC must occur on channels using this divide value. Programming PLL2_N does generate a SYNC event automatically which satisfies this requirement, but NO_SYNC_CLKoutX must be set to 0 for these clock outputs.

8.6.3.2 Registers R6 to R8

Registers R6 to R8 set the clock output types and analog delays.

8.6.3.2.1 CLKoutX_TYPE

The clock output types of the LMK04906 are individually programmable. The CLKoutX_TYPE registers set the output type of an individual clock output to LVDS, LVPECL, LVCMOS, or powers down the output buffer. Note that LVPECL supports four different amplitude levels and LVCMOS supports single LVCMOS outputs, inverted, and normal polarity of each output pin for maximum flexibility. For lowest spurious levels, configure the LVCMOS outputs as LVCMOS (Inv/Norm) or LVCMOS (Norm/Inv). LVCMOS (Inv/Inv) and LVCMOS (Norm/Norm) are the worst for spurious levels.

The programming addresses table shows at what register and address the specified clock output CLKoutX_TYPE register is located.

The CLKoutX_TYPE table shows the programming definition for these registers.

Copyright © 2012–2017, Texas Instruments Incorporated

Table 26. CLKoutX_TYPE Programming Addresses

CLKoutX	PROGRAMMING ADDRESS
CLKout0	R6[23:20]
CLKout1	R6[27:24]
CLKout2	R723:20]
CLKout3	R7[27:24]
CLKout4	R8[19:16]
CLKout5	R8[27:24]

Table 27. CLKoutX_TYPE, 4 Bits

R6-R8[31:28, 27:24, 23:20]	DEFINITION
0 (0x00)	Power down
1 (0x01)	LVDS
2 (0x02)	LVPECL (700 mVpp)
3 (0x03)	LVPECL (1200 mVpp)
4 (0x04)	LVPECL (1600 mVpp)
5 (0x05)	LVPECL (2000 mVpp)
6 (0x06)	LVCMOS (Norm/Inv)
7 (0x07)	LVCMOS (Inv/Norm)
8 (0x08)	LVCMOS (Norm/Norm)
9 (0x09)	LVCMOS (Inv/Inv)
10 (0x0A)	LVCMOS (Low/Norm)
11 (0x0A)	LVCMOS (Low/Inv)
12 (0x0C)	LVCMOS (Norm/Low)
13 (0x0D)	LVCMOS (Inv/Low)
14 (0x0E)	LVCMOS (Low/Low)

8.6.3.2.2 CLKoutX_ADLY

These registers control the analog delay of the clock output CLKoutX. Adding analog delay to the output will increase the noise floor of the output. For this analog delay to be active for a clock output, it must be selected with CLKoutX_ADL_SEL. If neither clock output in a clock output selects the analog delay, then the analog delay block is powered down.

In addition to the programmed delay, a fixed 500 ps of delay will be added by engaging the delay block.

The programming addresses table shows at what register and address the specified clock output CLKoutX_ADLY register is located.

The CLKoutX_ADLY table shows the programming definition for these registers.

Table 28. CLKoutX_ADLY Programming Addresses

CLKoutX_ADLY	PROGRAMMING ADDRESS
CLKout0_ADLY	R6[9:5]
CLKout1_ADLY	R6[15:11]
CLKout2_ADLY	R7[9:5]
CLKout3_ADLY	R7[15:11]
CLKout4_ADLY	R8[9:5]
CLKout5_ADLY	R8[15:11]

Copyright © 2012–2017, Texas Instruments Incorporated

Table 29. CLKoutX_ADLY, 5 Bits

R6-R8[15:11, 9:5]	DEFINITION
0 (0x00)	500 ps + No delay
1 (0x01)	500 ps + 25 ps
2 (0x02)	500 ps + 50 ps
3 (0x03)	500 ps + 75 ps
4 (0x04)	500 ps + 100 ps
5 (0x05)	500 ps + 125 ps
6 (0x06)	500 ps + 150 ps
7 (0x07)	500 ps + 175 ps
8 (0x08)	500 ps + 200 ps
9 (0x09)	500 ps + 225 ps
10 (0x0A)	500 ps + 250 ps
11 (0x0B)	500 ps + 275 ps
12 (0x0C)	500 ps + 300 ps
13 (0x0D)	500 ps + 325 ps
14 (0x0E)	500 ps + 350 ps
15 (0x0F)	500 ps + 375 ps
16 (0x10)	500 ps + 400 ps
17 (0x11)	500 ps + 425 ps
18 (0x12)	500 ps + 450 ps
19 (0x13)	500 ps + 475 ps
20 (0x14)	500 ps + 500 ps
21 (0x15)	500 ps + 525 ps
22 (0x16)	500 ps + 550 ps
23 (0x17)	500 ps + 575 ps

8.6.3.3 Register R10

8.6.3.3.1 OSCout0_TYPE

The OSCout0 clock output has a programmable output type. The OSCout0_TYPE register sets the output type to LVDS, LVPECL, LVCMOS, or powers down the output buffer. Note that LVPECL supports four different amplitude levels and LVCMOS supports dual and single LVCMOS outputs with inverted, and normal polarity of each output pin for maximum flexibility.

To turn on the output, the OSCout0_TYPE must be set to a non-power down setting and enabled with *EN_OSCout0, OSCout0 Output Enable*.

Copyright © 2012–2017, Texas Instruments Incorporated

Table 30. OSCout0_TYPE, 4 Bits

R10[27:24]	DEFINITION
0 (0x00)	Powerdown
1 (0x01)	LVDS
2 (0x02)	LVPECL (700 mVpp)
3 (0x03)	LVPECL (1200 mVpp)
4 (0x04)	LVPECL (1600 mVpp)
5 (0x05)	LVPECL (2000 mVpp)
6 (0x06)	LVCMOS (Norm/Inv)
7 (0x07)	LVCMOS (Inv/Norm)
8 (0x08)	LVCMOS (Norm/Norm)
9 (0x09)	LVCMOS (Inv/Inv)
10 (0x0A)	LVCMOS (Low/Norm)
11 (0x0B)	LVCMOS (Low/Inv)
12 (0x0C)	LVCMOS (Norm/Low)
13 (0x0D)	LVCMOS (Inv/Low)
14 (0x0E)	LVCMOS (Low/Low)

8.6.3.3.2 EN_OSCout0, OSCout0 Output Enable

EN_OSCout0 is used to enable an oscillator buffered output.

Table 31. EN_OSCout0

R10[22]	OUTPUT STATE
0	OSCout0 Disabled
1	OSCout0 Enabled

OSCout0 note: In addition to enabling the output with EN_OSCout0. The OSCout0_TYPE must be programmed to a non-power down value for the output buffer to power up.

8.6.3.3.3 OSCout0_MUX, Clock Output Mux

Sets OSCout0 buffer to output a divided or bypassed OSCin signal. The divisor is set by *OSCout_DIV, Oscillator Output Divide*.

Table 32. OSCout0_MUX

R10[20]	MUX OUTPUT
0	Bypass divider
1	Divided

8.6.3.3.4 PD_OSCin, OSCin Powerdown Control

Except in clock distribution mode, the OSCin buffer must always be powered up.

In clock distribution mode, the OSCin buffer must be powered down if not used.

Table 33. PD_OSCin

R10[19]	OSCin BUFFER
0	Normal Operation
1	Powerdown

8.6.3.3.5 OSCout_DIV, Oscillator Output Divide

The OSCout divider can be programmed from 2 to 8. Divide by 1 is achieved by bypassing the divider with *OSCout0_MUX, Clock Output Mux*.

Note that OSCout_DIV will be in the PLL1 N feedback path if OSCout0_MUX selects divided as an output. When OSCout_DIV is in the PLL1 N feedback path, the OSCout_DIV divide value must be accounted for when programming PLL1 N.

Copyright © 2012–2017, Texas Instruments Incorporated

See *PLL Programming* for more information on programming PLL1 to lock.

Table 34. OSCout_DIV, 3 Bits

R10[18:16]	DIVIDE
0 (0x00)	8
1 (0x01)	2
2 (0x02)	2
3 (0x03)	3
4 (0x04)	4
5 (0x05)	5
6 (0x06)	6
7 (0x07)	7

8.6.3.3.6 VCO_MUX

When the internal VCO is used, the VCO divider can be selected to divide the VCO output frequency to reduce the frequency on the clock distribution path. It is recommended to use the VCO directly unless:

- Very low output frequencies are required.
- If using the VCO divider results in three or more clock output divider/delays changing from extended to normal power mode, a small power savings may be achieved by using the VCO divider.

A consequence of using the VCO divider is a small degradation in phase noise.

Table 35. VCO_MUX

R10[12]	DIVIDE
0	VCO selected
1	VCO divider selected

8.6.3.3.7 EN_FEEDBACK_MUX

When using 0-delay or dynamic digital delay (SYNC_QUAL = 1), EN_FEEDBACK_MUX must be set to 1 to power up the feedback mux.

Table 36. EN_FEEDBACK_MUX

R10[11]	DIVIDE
0	Feedback mux powered down
1	Feedback mux enabled

8.6.3.3.8 VCO_DIV, VCO Divider

Divide value of the VCO Divider.

See *PLL Programming* for more information on programming PLL2 to lock.

Table 37. VCO_DIV, 3 Bits

R10[10:8]	DIVIDE
0 (0x00)	8
1 (0x01)	2
2 (0x02)	2
3 (0x03)	3
4 (0x04)	4
5 (0x05)	5
6 (0x06)	6
7 (0x07)	7

Copyright © 2012–2017, Texas Instruments Incorporated

8.6.3.3.9 FEEDBACK_MUX

When in 0-delay mode, the feedback mux selects the clock output to be fed back into the PLL1 N Divider.

Table 38. FEEDBACK_MUX, 3 Bits

R10[7:5]	DIVIDE
0 (0x00)	Reserved
1 (0x01)	CLKout1
2 (0x02)	Reserved
3 (0x03)	CLKout3
4 (0x04)	CLKout4
5 (0x05)	CLKout5
6 (0x06)	FBCLKin/FBCLKin*

8.6.3.4 REGISTER R11

8.6.3.4.1 MODE: Device Mode

MODE determines how the LMK04906 operates from a high level. Different blocks of the device can be powered up and down for specific application requirements from a dual loop architecture to clock distribution.

The LMK04906 can operate in:

- Dual PLL mode with the internal VCO or an external VCO.
- Single PLL mode uses PLL2 and powers down PLL1. OSCin is used for PLL reference input.
- Clock Distribution mode allows use of CLKin1 to distribute to clock outputs CLKout0 through CLKout11, and OSCin to distribute to OSCout0, and optionally CLKout3 through CLKout9.

For the PLL modes, 0-delay can be used have deterministic phase with the input clock.

For the PLL modes it is also possible to use an external VCO.

Table 39. MODE, 5 Bits

R11[31:27]	VALUE
0 (0x00)	Dual PLL, Internal VCO
1 (0x01)	Reserved
2 (0x02)	Dual PLL, Internal VCO, 0-Delay
3 (0x03)	Dual PLL, External VCO (Fin)
4 (0x04)	Reserved
5 (0x05)	Dual PLL, External VCO (Fin), 0-Delay
6 (0x06)	PLL2, Internal VCO
7 (0x07)	Reserved
8 (0x08)	PLL2, Internal VCO, 0–Delay
9 (0x09)	Reserved
10 (0x0A)	Reserved
11 (0x0B)	PLL2, External VCO (Fin)
12 (0x0C)	Reserved
13 (0x0D)	Reserved
14 (0x0E)	Reserved
15 (0x0F)	Reserved
16 (0x10)	Clock Distribution

Copyright © 2012–2017, Texas Instruments Incorporated

8.6.3.4.2 EN_SYNC, Enable Synchronization

The EN_SYNC bit (default on) must be enabled for synchronization to work. Synchronization is required for dynamic digital delay.

The synchronization enable may be turned off once the clocks are operating to save current. If EN_SYNC is set after it has been cleared (a transition from 0 to 1), a SYNC is generated that can disrupt the active clock outputs. Setting the NO_SYNC_CLKoutX bits will prevent this SYNC pulse from affecting the output clocks. Setting the EN_SYNC bit is not a valid method for synchronizing the clock outputs. See the *Clock Output Synchronization (SYNC)* for more information on synchronization.

Table 40. EN_SYNC

R11[26]	DEFINITION
0	Synchronization disabled
1	Synchronization enabled

8.6.3.4.3 NO_SYNC_CLKoutX

The NO_SYNC_CLKoutX bits prevent individual clock outputs from becoming synchronized during a SYNC event. A reason to prevent individual clock output from becoming synchronized is that during synchronization, the clock output is in a fixed low state or can have a glitch pulse.

By disabling SYNC on a clock output, it will continue to operate normally during a SYNC event.

Digital delay requires a SYNC operation to take effect. If NO_SYNC_CLKoutX is set before a SYNC event, the digital delay value will be unused.

Setting the NO_SYNC_CLKoutX bit has no effect on clocks already synchronized together.

Table 41. NO_SYNC_CLKoutX Programming Addresses

NO_SYNC_CLKoutX	PROGRAMMING ADDRESS
CLKout0	R11:20
CLKout1	R11:21
CLKout2	R11:22
CLKout3	R11:23
CLKout4	R11:24
CLKout5	R11:25

Table 42. NO_SYNC_CLKoutX

R11[25, 24, 23, 22, 21, 20]	DEFINITION
0	CLKoutX will synchronize
1	CLKoutX will not synchronize

8.6.3.4.4 SYNC_CLKin2_MUX

Mux controlling SYNC/Status_CLKin2 pin.

All the outputs logic is active high when SYNC_TYPE = 3 (Output). All the outputs logic is active low when SYNC_TYPE = 4 (Output Inverted). For example, when SYNC_MUX = 0 (Logic Low) and SYNC_TYPE = 3 (Output) then SYNC outputs a logic low. When SYNC_MUX = 0 (Logic Low) and SYNC_TYPE = 4 (Output Inverted) then SYNC outputs a logic high.

Table 43. SYNC_MUX, 2 Bits

R11[19:18]	SYNC PIN OUTPUT
0 (0x00)	Logic Low
1 (0x01)	CLKin2 LOS
2 (0x02)	CLKin2 Selected
3 (0x03)	uWire Readback

Copyright © 2012–2017, Texas Instruments Incorporated

8.6.3.4.5 SYNC_QUAL

When SYNC_QUAL is set, clock outputs will be synchronized to an existing clock output selected by FEEDBACK_MUX. By using the NO_SYNC_CLKoutX bits, selected clock outputs will not be interrupted during the SYNC event.

Qualifying the SYNC by an output clock means that the pulse which turns the clock outputs off and on will have a fixed time relationship to the qualifying output clock.

SYNC_QUAL = 1 requires CLKout2_PD = 0 for proper operation. CLKout2_TYPE may be set to Powerdown mode.

See *Clock Output Synchronization (SYNC)* for more information.

Table 44. SYNC_QUAL

R11[17]	MODE
0	No qualification
1	Qualification by clock output from feedback mux (Must set CLKout2_PD = 0)

8.6.3.4.6 SYNC_POL_INV

Sets the polarity of the SYNC pin when input. When SYNC is asserted the clock outputs will transition to a low state.

See *Clock Output Synchronization (SYNC)* for more information on SYNC. A SYNC event can be generated by toggling this bit through the MICROWIRE interface.

Table 45. SYNC_POL_INV

R11[16]	POLARITY
0	SYNC is active high
1	SYNC is active low

8.6.3.4.7 SYNC_EN_AUTO

When set, causes a SYNC event to occur when programming register R0 to R5 to adjust digital delay values.

The SYNC event will coincide with the LEuWire pin falling edge.

See *Special Programming Case for R0 to R5 for CLKoutX_DIV and CLKoutX_DDLY* for more information on possible special programming considerations when SYNC_EN_AUTO = 1.

Table 46. SYNC_EN_AUTO

R11[15]	MODE
0	Manual SYNC
1	SYNC Internally Generated

8.6.3.4.8 SYNC_TYPE

Sets the IO type of the SYNC pin.

Table 47. SYNC_TYPE, 3 Bits

R11[14:12]	POLARITY
0 (0x00)	Input
1 (0x01)	Input /w pull-up resistor
2 (0x02)	Input /w pull-down resistor
3 (0x03)	Output (push-pull)
4 (0x04)	Output inverted (push-pull)
5 (0x05)	Output (open source)
6 (0x06)	Output (open drain)

Copyright © 2012–2017, Texas Instruments Incorporated

When in output mode the SYNC input is forced to 0 regardless of the SYNC_MUX setting. A synchronization can then be activated by uWire by programming the SYNC_POL_INV register to active low to assert SYNC. SYNC can then be released by programming SYNC_POL_INV to active high. Using this uWire programming method to create a SYNC event saves the need for an IO pin from another device.

8.6.3.4.9 EN_PLL2_XTAL

If an external crystal is being used to implement a discrete VCXO, the internal feedback amplifier must be enabled with this bit in order to complete the oscillator circuit.

Table 48. EN_PLL2_XTAL

R11[5]	OSCILLATOR AMPLIFIER STATE
0	Disabled
1	Enabled

8.6.3.5 Register R12

8.6.3.5.1 LD_MUX

LD_MUX sets the output value of the LD pin.

All the outputs logic is active high when LD_TYPE = 3 (Output). All the outputs logic is active low when LD_TYPE = 4 (Output Inverted). For example, when LD_MUX = 0 (Logic Low) and LD_TYPE = 3 (Output) then Status_LD outputs a logic low. When LD_MUX = 0 (Logic Low) and LD_TYPE = 4 (Output Inverted) then Status_LD outputs a logic high.

Table 49. LD_MUX, 5 Bits

R12[31:27]	DIVIDE
0 (0x00)	Logic Low
1 (0x01)	PLL1 DLD
2 (0x02)	PLL2 DLD
3 (0x03)	PLL1 & PLL2 DLD
4 (0x04)	Holdover Status
5 (0x05)	DAC Locked
6 (0x06)	Reserved
7 (0x07)	uWire Readback
8 (0x08)	DAC Rail
9 (0x09)	DAC Low
10 (0x0A)	DAC High
11 (0x0B)	PLL1_N
12 (0x0C)	PLL1_N/2
13 (0x0D)	PLL2 N
14 (0x0E)	PLL2 N/2
15 (0x0F)	PLL1_R
16 (0x10)	PLL1_R/2
17 (0x11)	PLL2 R (1)
18 (0x12)	PLL2 R/2 (1)

(1) Only valid when HOLDOVER_MUX is not set to 2 (PLL2_DLD) or 3 (PLL1 & PLL2 DLD).

Copyright © 2012–2017, Texas Instruments Incorporated

8.6.3.5.2 LD_TYPE

Sets the IO type of the LD pin.

Table 50. LD_TYPE, 3 Bits

R12[26:24]	POLARITY
0 (0x00)	Reserved
1 (0x01)	Reserved
2 (0x02)	Reserved
3 (0x03)	Output (push-pull)
4 (0x04)	Output inverted (push-pull)
5 (0x05)	Output (open source)
6 (0x06)	Output (open drain)

8.6.3.5.3 SYNC_PLLX_DLD

By setting SYNC_PLLX_DLD a SYNC mode will be engaged (asserted SYNC) until PLL1 and/or PLL2 locks. SYNC_QUAL must be 0 to use this functionality.

Table 51. SYNC_PLL2_DLD

R12[23]	SYNC MODE FORCED
0	No
1	Yes

Table 52. SYNC_PLL1_DLD

R12[22]	SYNC MODE FORCED
0	No
1	Yes

8.6.3.5.4 EN_TRACK

Enable the DAC to track the PLL1 tuning voltage. For optional use in in holdover mode.

Tracking can be used to monitor PLL1 voltage by readback of DAC_CNT register in any mode.

Copyright © 2012–2017, Texas Instruments Incorporated

Table 53. EN_TRACK

R12[8]	DAC TRACKING
0	Disabled
1	Enabled

8.6.3.5.5 HOLDOVER_MODE

Enable the holdover mode.

Table 54. HOLDOVER_MODE, 2 Bits

R12[7:6]	HOLDOVER MODE
0	Reserved
1	Disabled
2	Enabled
3	Reserved

8.6.3.6 Register R13

8.6.3.6.1 HOLDOVER_MUX

HOLDOVER_MUX sets the output value of the Status_Holdover pin.

The outputs are active high when HOLDOVER_TYPE = 3 (Output). The outputs are active low when HOLDOVER_TYPE = 4 (Output Inverted).

Table 55. HOLDOVER_MUX, 5 Bits

R13[31:27]	DIVIDE
0 (0x00)	Logic Low
1 (0x01)	PLL1 DLD
2 (0x02)	PLL2 DLD
3 (0x03)	PLL1 & PLL2 DLD
4 (0x04)	Holdover Status
5 (0x05)	DAC Locked
6 (0x06)	Reserved
7 (0x07)	uWire Readback
8 (0x08)	DAC Rail
9 (0x09)	DAC Low
10 (0x0A)	DAC High
11 (0x0B)	PLL1 N
12 (0x0C)	PLL1 N/2
13 (0x0D)	PLL2 N
14 (0x0E)	PLL2 N/2
15 (0x0F)	PLL1 R
16 (0x10)	PLL1 R/2
17 (0x11)	PLL2 R (1)
18 (0x12)	PLL2 R/2 (1)

(1) Only valid when LD_MUX is not set to 2 (PLL2_DLD) or 3 (PLL1 & PLL2 DLD).

Copyright © 2012–2017, Texas Instruments Incorporated

8.6.3.6.2 HOLDOVER_TYPE

Sets the IO mode of the Status_Holdover pin.

Table 56. HOLDOVER_TYPE, 3 Bits

R13[26:24]	POLARITY
0 (0x00)	Reserved
1 (0x01)	Reserved
2 (0x02)	Reserved
3 (0x03)	Output (push-pull)
4 (0x04)	Output inverted (push-pull)
5 (0x05)	Output (open source)
6 (0x06)	Output (open drain)

8.6.3.6.3 Status_CLKin1_MUX

Status_CLKin1_MUX sets the output value of the Status_CLKin1 pin. If *Status_CLKin1_TYPE* is set to an input type, this register has no effect. This MUX register only sets the output signal.

The outputs are active high when Status_CLKin1_TYPE = 3 (Output). The outputs are active low when Status_CLKin1_TYPE = 4 (Output Inverted).

Table 57. Status_CLKin1_MUX, 3 Bits

R13[22:20]	DIVIDE
0 (0x00)	Logic Low
1 (0x01)	CLKin1 LOS
2 (0x02)	CLKin1 Selected
3 (0x03)	DAC Locked
4 (0x04)	DAC Low
5 (0x05)	DAC High
6 (0x06)	uWire Readback

8.6.3.6.4 Status_CLKin0_TYPE

Status_CLKin0_TYPE sets the IO type of the Status_CLKin0 pin.

Table 58. Status_CLKin0_TYPE, 3 Bits

R13[18:16]	POLARITY
0 (0x00)	Input
1 (0x01)	Input /w pull-up resistor
2 (0x02)	Input /w pull-down resistor
3 (0x03)	Output (push-pull)
4 (0x04)	Output inverted (push-pull)
5 (0x05)	Output (open source)
6 (0x06)	Output (open drain)

8.6.3.6.5 DISABLE_DLD1_DET

DISABLE_DLD1_DET disables the HOLDOVER mode from being activated when PLL1 lock detect signal transitions from high to low.

When using Pin Select Mode as the input clock switch mode, this bit should normally be set.

Table 59. DISABLE_DLD1_DET

R13[15]	HOLDOVER DLD1 DETECT
0	PLL1 DLD causes clock switch event
1	PLL1 DLD **does not** cause clock switch event

Copyright © 2012–2017, Texas Instruments Incorporated

8.6.3.6.6 Status_CLKin0_MUX

CLKin0_MUX sets the output value of the Status_CLKin0 pin. If *Status_CLKin0_TYPE* is set to an input type, this register has no effect. This MUX register only sets the output signal.

The outputs logic is active high when Status_CLKin0_TYPE = 3 (Output). The outputs logic is active low when Status_CLKin0_TYPE = 4 (Output Inverted).

Table 60. Status_CLKin0_MUX, 3 Bits

R13[14:12]	DIVIDE
0 (0x00)	Logic Low
1 (0x01)	CLKin0 LOS
2 (0x02)	CLKin0 Selected
3 (0x03)	DAC Locked
4 (0x04)	DAC Low
5 (0x05)	DAC High
6 (0x06)	uWire Readback

8.6.3.6.7 CLKin_SELECT_MODE

CLKin_SELECT_MODE sets the mode used in determining reference CLKin for PLL1.

Table 61. CLKin_SELECT_MODE, 3 Bits

R13[11:9]	MODE
0 (0x00)	CLKin0 Manual
1 (0x01)	CLKin1 Manual
2 (0x02)	CLKin2 Manual
3 (0x03)	Pin Select Mode
4 (0x04)	Auto Mode
5 (0x05)	Reserved
6 (0x06)	Auto mode & next clock pin select
7 (0x07)	Reserved

8.6.3.6.8 CLKin_Sel_INV

CLKin_Sel_INV sets the input polarity of Status_CLKin0 and Status_CLKin1 pins (Auto modes only).

Table 62. CLKin_Sel_INV

R13[8]	INPUT
0	Active High
1	Active Low

8.6.3.6.9 EN_CLKinX

Each clock input can individually be enabled to be used during auto-switching CLKin_SELECT_MODE. Clock input switching priority is always CLKin0 → CLKin1 → CLKin2 → CLKin0.

Copyright © 2012–2017, Texas Instruments Incorporated

Table 63. EN_CLKin2

R13[7]	INPUT
0	No
1	Yes

Table 64. EN_CLKin1

R13[6]	VALID
0	No
1	Yes

Table 65. EN_CLKin0

R13[5]	VALID
0	No
1	Yes

8.6.3.7 Register 14

8.6.3.7.1 LOS_TIMEOUT

This bit controls the amount of time in which no activity on a CLKin causes LOS (Loss-of-Signal) to be asserted.

Table 66. LOS_TIMEOUT, 2 Bits

R14[31:30]	TIMEOUT
0 (0x00)	1200 ns, 420 kHz
1 (0x01)	206 ns, 2.5 MHz
2 (0x02)	52.9 ns, 10 MHz
3 (0x03)	23.7 ns, 22 MHz

8.6.3.7.2 EN_LOS

Enables the LOS (Loss-of-Signal) timeout control.

Table 67. EN_LOS

R14[28]	LOS
0	Disabled
1	Enabled

8.6.3.7.3 Status_CLKin1_TYPE

Sets the IO type of the Status_CLKin1 pin.

Table 68. Status_CLKin1_TYPE, 3 Bits

R14[26:24]	POLARITY
0 (0x00)	Input
1 (0x01)	Input /w pull-up resistor
2 (0x02)	Input /w pull-down resistor
3 (0x03)	Output (push-pull)
4 (0x04)	Output inverted (push-pull)
5 (0x05)	Output (open source)
6 (0x06)	Output (open drain)

8.6.3.7.4 CLKinX_BUF_TYPE, PLL1 CLKinX/CLKinX* Buffer Type

There are two input buffer types for the PLL1 reference clock inputs: either bipolar or CMOS. Bipolar is recommended for differential inputs such as LVDS and LVPECL. CMOS is recommended for DC coupled single ended inputs.

Copyright © 2012–2017, Texas Instruments Incorporated

When using bipolar, CLKinX and CLKinX* input pins must be AC coupled when using a differential or single ended input.

When using CMOS, CLKinX and CLKinX* input pins may be AC or DC coupled with a differential input.

When using CMOS in single ended mode, the unused clock input pin (CLKinX or CLKinX*) must be AC grounded. The used clock input pin (CLKinX* or CLKinX) may be AC or DC coupled to the signal source.

The programming addresses table shows at what register and address the specified CLKinX_BUF_TYPE bit is located.

The CLKinX_BUF_TYPE table shows the programming definition for these registers.

Table 69. CLKinX_BUF_TYPE Programming Addresses

CLKinX_BUF_TYPE	PROGRAMMING ADDRESS
CLKin2_BUF_TYPE	R14[22]
CLKin1_BUF_TYPE	R14[21]
CLKin0_BUF_TYPE	R14[20]

Table 70. CLKinX_BUF_TYPE

R14[22, 21, 20]	CLKinX BUFFER TYPE
0	Bipolar
1	CMOS

8.6.3.7.5 DAC_HIGH_TRIP

Voltage from Vcc at which holdover mode is entered if EN_VTUNE_RAIL_DAC is enabled. Will also set flags which can be monitored out Status_LD/Status_Holdover pins.

Step size is ~51 mV

Table 71. DAC_HIGH_TRIP, 6 Bits

R14[19:14]	TRIP VOLTAGE FROM VCC (V)
0 (0x00)	1 × Vcc / 64
1 (0x01)	2 × Vcc / 64
2 (0x02)	3 × Vcc / 64
3 (0x03)	4 × Vcc / 64
4 (0x04)	5 × Vcc / 64
...	...
61 (0x3D)	62 × Vcc / 64
62 (0x3E)	63 × Vcc / 64
63 (0x3F)	64 × Vcc / 64

8.6.3.7.6 DAC_LOW_TRIP

Voltage from GND at which holdover mode is entered if EN_VTUNE_RAIL_DAC is enabled. Will also set flags which can be monitored out Status_LD/Status_Holdover pins.

Step size is ~51 mV

Copyright © 2012–2017, Texas Instruments Incorporated

Table 72. DAC_LOW_TRIP, 6 Bits

R14[11:6]	TRIP VOLTAGE FROM GND (V)
0 (0x00)	1 × Vcc / 64
1 (0x01)	2 × Vcc / 64
2 (0x02)	3 × Vcc / 64
3 (0x03)	4 × Vcc / 64
4 (0x04)	5 × Vcc / 64
...	...
61 (0x3D)	62 × Vcc / 64
62 (0x3E)	63 × Vcc / 64
63 (0x3F)	64 × Vcc / 64

8.6.3.7.7 EN_VTUNE_RAIL_DET

Enables the DAC Vtune rail detection. When the DAC achieves a specified Vtune, if this bit is enabled, the current clock input is considered invalid and an input clock switch event is generated.

Table 73. EN_VTUNE_RAIL_DET

R14[5]	STATE
0	Disabled
1	Enabled

8.6.3.8 Register 15

8.6.3.8.1 MAN_DAC

Sets the DAC value when in manual DAC mode in approximately 3.2-mV steps.

Table 74. MAN_DAC, 10 Bits

R15[31:22]	DAC VOLTAGE
0 (0x00)	0 × Vcc / 1023
1 (0x01)	1 × Vcc / 1023
2 (0x02)	2 × Vcc / 1023
...	...
1023 (0x3FF)	1023 × Vcc / 1023

8.6.3.8.2 EN_MAN_DAC

This bit enables the manual DAC mode.

Table 75. EN_MAN_DAC

R15[20]	DAC MODE
0	Automatic
1	Manual

8.6.3.8.3 HOLDOVER_DLD_CNT

Lock must be valid for this many clocks of PLL1 PDF before holdover mode is exited.

Table 76. HOLDOVER_DLD_CNT, 14 Bits

R15[19:6]	EXIT COUNTS
0 (0x00)	Reserved
1 (0x01)	1
2 (0x02)	2
...	...
16,383 (0x3FFF)	16,383

Copyright © 2012–2017, Texas Instruments Incorporated

8.6.3.8.4 FORCE_HOLDOVER

This bit forces the holdover mode.

When holdover is forced, if in fixed CPout1 mode, then the DAC will set the programmed MAN_DAC value. If in tracked CPout1 mode, then the DAC will set the current tracked DAC value.

Setting FORCE_HOLDOVER does not constitute a clock input switch event unless DISABLE_DLD1_DET = 0, since in holdover mode, PLL1_DLD = 0 this will trigger the clock input switch event.

Table 77. FORCE_HOLDOVER

R15[5]	HOLDOVER
0	Disabled
1	Enabled

8.6.3.9 Register 16

8.6.3.9.1 XTAL_LVL

Sets the peak amplitude on the tunable crystal.

Increasing this value can improve the crystal oscillator phase noise performance at the cost of increased current and higher crystal power dissipation levels.

Table 78. XTAL_LVL, 2 Bits

R15[31:22]	PEAK AMPLITUDE(1)
0 (0x00)	1.65 Vpp
1 (0x01)	1.75 Vpp
2 (0x02)	1.90 Vpp
3 (0x03)	2.05 Vpp

(1) At crystal frequency of 20.48 MHz

8.6.3.10 Register 23

This register must not be programmed, it is a readback only register.

8.6.3.10.1 DAC_CNT

The DAC_CNT register is 10 bits in size and located at readback bit position [23:14]. When using tracking mode for holdover, the DAC value can be readback at this address.

8.6.3.11 Register 24

8.6.3.11.1 PLL2_C4_LF, PLL2 Integrated Loop Filter Component

Internal loop filter components are available for PLL2, enabling either 3rd or 4th order loop filters without requiring external components.

Internal loop filter capacitor C4 can be set according to the following table.

Copyright © 2012–2017, Texas Instruments Incorporated

Table 79. PLL2_C4_LF, 4 Bits

R24[31:28]	LOOP FILTER CAPACITANCE (pF)
0 (0x00)	10 pF
1 (0x01)	15 pF
2 (0x02)	29 pF
3 (0x03)	34 pF
4 (0x04)	47 pF
5 (0x05)	52 pF
6 (0x06)	66 pF
7 (0x07)	71 pF
8 (0x08)	103 pF
9 (0x09)	108 pF
10 (0x0A)	122 pF
11 (0x0B)	126 pF
12 (0x0C)	141 pF
13 (0x0D)	146 pF
14 (0x0E)	Reserved
15 (0x0F)	Reserved

8.6.3.11.2 PLL2_C3_LF, PLL2 Integrated Loop Filter Component

Internal loop filter components are available for PLL2, enabling either 3rd or 4th order loop filters without requiring external components.

Internal loop filter capacitor C3 can be set according to the following table.

Table 80. PLL2_C3_LF, 4 Bits

R24[27:24]	LOOP FILTER CAPACITANCE (pF)
0 (0x00)	10 pF
1 (0x01)	11 pF
2 (0x02)	15 pF
3 (0x03)	16 pF
4 (0x04)	19 pF
5 (0x05)	20 pF
6 (0x06)	24 pF
7 (0x07)	25 pF
8 (0x08)	29 pF
9 (0x09)	30 pF
10 (0x0A)	33 pF
11 (0x0B)	34 pF
12 (0x0C)	38 pF
13 (0x0D)	39 pF
14 (0x0E)	Reserved
15 (0x0F)	Reserved

8.6.3.11.3 PLL2_R4_LF, PLL2 Integrated Loop Filter Component

Internal loop filter components are available for PLL2, enabling either 3rd or 4th order loop filters without requiring external components.

Internal loop filter resistor R4 can be set according to the following table.

Copyright © 2012–2017, Texas Instruments Incorporated

Table 81. PLL2_R4_LF, 3 Bits

R24[22:20]	RESISTANCE
0 (0x00)	200 Ω
1 (0x01)	1 kΩ
2 (0x02)	2 kΩ
3 (0x03)	4 kΩ
4 (0x04)	16 kΩ
5 (0x05)	Reserved
6 (0x06)	Reserved
7 (0x07)	Reserved

8.6.3.11.4 PLL2_R3_LF, PLL2 Integrated Loop Filter Component

Internal loop filter components are available for PLL2, enabling either 3rd or 4th order loop filters without requiring external components.

Internal loop filter resistor R3 can be set according to Table 82.

Table 82. PLL2_R3_LF, 3 Bits

R24[18:16]	RESISTANCE
0 (0x00)	200 Ω
1 (0x01)	1 kΩ
2 (0x02)	2 kΩ
3 (0x03)	4 kΩ
4 (0x04)	16 kΩ
5 (0x05)	Reserved
6 (0x06)	Reserved
7 (0x07)	Reserved

8.6.3.11.5 PLL1_N_DLY

Increasing delay of PLL1_N_DLY will cause the outputs to lead from CLKinX. For use in 0-delay mode.

Table 83. PLL1_N_DLY, 3 Bits

R24[14:12]	DEFINITION
0 (0x00)	0 ps
1 (0x01)	205 ps
2 (0x02)	410 ps
3 (0x03)	615 ps
4 (0x04)	820 ps
5 (0x05)	1025 ps
6 (0x06)	1230 ps
7 (0x07)	1435 ps

Copyright © 2012–2017, Texas Instruments Incorporated

8.6.3.11.6 PLL1_R_DLY

Increasing delay of PLL1_R_DLY will cause the outputs to lag from CLKinX. For use in 0-delay mode.

Table 84. PLL1_R_DLY, 3 Bits

R24[10:8]	DEFINITION
0 (0x00)	0 ps
1 (0x01)	205 ps
2 (0x02)	410 ps
3 (0x03)	615 ps
4 (0x04)	820 ps
5 (0x05)	1025 ps
6 (0x06)	1230 ps
7 (0x07)	1435 ps

8.6.3.11.7 PLL1_WND_SIZE

PLL1_WND_SIZE sets the window size used for digital lock detect for PLL1. If the phase error between the reference and feedback of PLL1 is less than specified time, then the PLL1 lock counter increments.

See *Digital Lock Detect Frequency Accuracy* for more information.

Table 85. PLL1_WND_SIZE, 2 Bits

R24[7:6]	DEFINITION
0	5.5 ns
1	10 ns
2	18.6 ns
3	40 ns

8.6.3.12 Register 25

8.6.3.12.1 DAC_CLK_DIV

The DAC update clock frequency is the PLL1 phase detector frequency divided by this divisor.

Table 86. DAC_CLK_DIV, 10 Bits

R25[31:22]	DIVIDE
0 (0x00)	Reserved
1 (0x01)	1
2 (0x02)	2
3 (0x03)	3
...	...
1,022 (0x3FE)	1022
1,023 (0x3FF)	1023

8.6.3.12.2 PLL1_DLD_CNT

The reference and feedback of PLL1 must be within the window of phase error as specified by PLL1_WND_SIZE for this many phase detector cycles before PLL1 digital lock detect is asserted.

See *Digital Lock Detect Frequency Accuracy* for more information.

Copyright © 2012–2017, Texas Instruments Incorporated

Table 87. PLL1_DLD_CNT, 14 Bits

R25[19:6]	DIVIDE
0	Reserved
1	1
2	2
3	3
...	...
16,382 (0x3FFE)	16,382
16,383 (0x3FFF)	16,383

8.6.3.13 Register 26

8.6.3.13.1 PLL2_WND_SIZE

PLL2_WND_SIZE sets the window size used for digital lock detect for PLL2. If the phase error between the reference and feedback of PLL2 is less than specified time, then the PLL2 lock counter increments. This value must be programmed to 2 (3.7 ns).

See *Digital Lock Detect Frequency Accuracy* for more information.

Table 88. PLL2_WND_SIZE, 2 Bits

R26[31:30]	DEFINITION
0	Reserved
1	Reserved
2	3.7 ns
3	Reserved

8.6.3.13.2 EN_PLL2_REF_2X, PLL2 Reference Frequency Doubler

Enabling the PLL2 reference frequency doubler allows for higher phase detector frequencies on PLL2 than would normally be allowed with the given VCXO or Crystal frequency.

Higher phase detector frequencies reduces the PLL N values which makes the design of wider loop bandwidth filters possible.

See *PLL Programming* for more information on how to program the PLL dividers to lock the PLL.

Table 89. EN_PLL2_REF_2X

R26[29]	DESCRIPTION
0	Reference frequency normal (1)
1	Reference frequency doubled (2x)

(1) When the doubler is not enabled, PLL2_R should not be programmed to 1.

8.6.3.13.3 PLL2_CP_POL, PLL2 Charge Pump Polarity

PLL2_CP_POL sets the charge pump polarity for PLL2. The internal VCO requires the negative charge pump polarity to be selected. Many VCOs use positive slope.

A positive slope VCO increases output frequency with increasing voltage. A negative slope VCO decreases output frequency with increasing voltage.

Table 90. PLL2_CP_POL

R26[28]	DESCRIPTION
0	Negative Slope VCO/VCXO
1	Positive Slope VCO/VCXO

Copyright © 2012–2017, Texas Instruments Incorporated

8.6.3.13.4 PLL2_CP_GAIN, PLL2 Charge Pump Current

This bit programs the PLL2 charge pump output current level. The table below also illustrates the impact of the PLL2 TRI-STATE bit in conjunction with PLL2_CP_GAIN.

Table 91. PLL2_CP_GAIN, 2 Bits

R26[27:26]	PLL2_CP_TRI R27[5]	CHARGE PUMP CURRENT (µA)
X	1	Hi-Z
0 (0x00)	0	100
1 (0x01)	0	400
2 (0x02)	0	1600
3 (0x03)	0	3200

8.6.3.13.5 PLL2_DLD_CNT

The reference and feedback of PLL2 must be within the window of phase error as specified by PLL2_WND_SIZE for **PLL2_DLD_CNT** cycles before PLL2 digital lock detect is asserted.

See *Digital Lock Detect Frequency Accuracy* for more information

Table 92. PLL2_DLD_CNT, 14 Bits

R26[19:6]	DIVIDE
0 (0x00)	Reserved
1 (0x01)	1
2 (0x02)	2
3 (0x03)	3
...	...
16,382 (0x3FFE)	16,382
16,383 (0x3FFF)	16,383

8.6.3.13.6 PLL2_CP_TRI, PLL2 Charge Pump TRI-STATE

This bit allows for the PLL2 charge pump output pin, CPout2, to be placed into TRI-STATE.

Table 93. PLL2_CP_TRI

R26[5]	DESCRIPTION
0	PLL2 CPout2 is active
1	PLL2 CPout2 is at TRI-STATE

8.6.3.14 Register 27

8.6.3.14.1 PLL1_CP_POL, PLL1 Charge Pump Polarity

PLL1_CP_POL sets the charge pump polarity for PLL1. Many VCXOs use positive slope.

A positive slope VCXO increases output frequency with increasing voltage. A negative slope VCXO decreases output frequency with increasing voltage.

Table 94. PLL1_CP_POL

R27[28]	DESCRIPTION
0	Negative Slope VCO/VCXO
1	Positive Slope VCO/VCXO

Copyright © 2012–2017, Texas Instruments Incorporated

8.6.3.14.2 PLL1_CP_GAIN, PLL1 Charge Pump Current

This bit programs the PLL1 charge pump output current level. The table below also illustrates the impact of the PLL1 TRI-STATE bit in conjunction with PLL1_CP_GAIN.

Table 95. PLL1_CP_GAIN, 2 Bits

R26[27:26]	PLL1_CP_TRI R27[5]	CHARGE PUMP CURRENT (µA)
X	1	Hi-Z
0 (0x00)	0	100
1 (0x01)	0	200
2 (0x02)	0	400
3 (0x03)	0	1600

8.6.3.14.3 CLKinX_PreR_DIV

The pre-R dividers before the PLL1 R divider can be programmed such that when the active clock input is switched, the frequency at the input of the PLL1 R divider will be the same. This allows PLL1 to stay in lock without needing to re-program the PLL1 R register when different clock input frequencies are used. This is especially useful in the auto CLKin switching modes.

Table 96. CLKinX_PreR_DIV Programming Addresses

CLKinX_PreR_DIV	PROGRAMMING ADDRESS
CLKin2_PreR_DIV	R27[25:24]
CLKin1_PreR_DIV	R27[23:22]
CLKin0_PreR_DIV	R27[21:20]

Table 97. CLKinX_PreR_DIV, 2 Bits

R27[25:24, 23:22, 21:20]	DIVIDE
0 (0x00)	1
1 (0x01)	2
2 (0x02)	4
3 (0x03)	8

8.6.3.14.4 PLL1_R, PLL1 R Divider

The reference path into the PLL1 phase detector includes the PLL1 R divider. See *PLL Programming* for more information on how to program the PLL dividers to lock the PLL.

The valid values for PLL1_R are shown in the table below.

Table 98. PLL1_R, 14 Bits

R27[19:6]	DIVIDE
0 (0x00)	Reserved
1 (0x01)	1
2 (0x02)	2
3 (0x03)	3
...	...
16,382 (0x3FFE)	16,382
16,383 (0x3FFF)	16,383

8.6.3.14.5 PLL1_CP_TRI, PLL1 Charge Pump TRI-STATE

This bit allows for the PLL1 charge pump output pin, CPout1, to be placed into TRI-STATE.

Table 99. PLL1_CP_TRI

R27[5]	DESCRIPTION
0	PLL1 CPout1 is active
1	PLL1 CPout1 is at TRI-STATE

Copyright © 2012–2017, Texas Instruments Incorporated

8.6.3.15 Register 28

8.6.3.15.1 PLL2_R, PLL2 R Divider

The reference path into the PLL2 phase detector includes the PLL2 R divider.

See *PLL Programming* for more information on how to program the PLL dividers to lock the PLL.

Table 100 shows the valid values for PLL2_R .

Table 100. PLL2_R, 12 Bits

R28[31:20]	DIVIDE
0 (0x00)	Not Valid
1 (0x01)	1 (1)
2 (0x02)	2
3 (0x03)	3
...	...
4,094 (0xFFE)	4,094
4,095 (0xFFF)	4,095

(1) When using PLL2_R divide value of 1, the PLL2 reference doubler should be used (EN_PLL2_REF_2X = 1).

8.6.3.15.2 PLL1_N, PLL1 N Divider

The feedback path into the PLL1 phase detector includes the PLL1 N divider.

See *PLL Programming* for more information on how to program the PLL dividers to lock the PLL.

Table 101 shows the valid values for PLL1_N.

Table 101. PLL1_N, 14 Bits

R28[19:6]	DIVIDE
0 (0x00)	Not Valid
1 (0x01)	1
2 (0x02)	2
...	...
4,095 (0xFFF)	4,095

8.6.3.16 REGISTER 29

8.6.3.16.1 OSCin_FREQ, PLL2 Oscillator Input Frequency Register

The frequency of the PLL2 reference input to the PLL2 Phase Detector (OSCin/OSCin* port) must be programmed to support proper operation of the frequency calibration routine which locks the internal VCO to the target frequency.

Table 102. OSCin_FREQ, 3 Bits

R29[26:24]	OSCin FREQUENCY
0 (0x00)	0 to 63 MHz
1 (0x01)	>63 MHz to 127 MHz
2 (0x02)	>127 MHz to 255 MHz
3 (0x03)	Reserved
4 (0x04)	>255 MHz to 400 MHz

Copyright © 2012–2017, Texas Instruments Incorporated

8.6.3.16.2 PLL2_FAST_PDF, High PLL2 Phase Detector Frequency

When PLL2 phase detector frequency is greater than 100 MHz, set the PLL2_FAST_PDF to ensure proper operation of device.

Table 103. PLL2_FAST_PDF

R29[23]	PLL2 PDF
0	Less than or equal to 100 MHz
1	Greater than 100 MHz

8.6.3.16.3 PLL2_N_CAL, PLL2 N Calibration Divider

During the frequency calibration routine, the PLL uses the divide value of the PLL2_N_CAL register instead of the divide value of the PLL2_N register to lock the VCO to the target frequency.

See *PLL Programming* for more information on how to program the PLL dividers to lock the PLL.

Table 104. PLL2_N_CAL, 18 Bits

R30[22:5]	DIVIDE
0 (0x00)	Not Valid
1 (0x01)	1
2 (0x02)	2
...	...
262,143 (0x3FFFF)	262,143

8.6.3.17 Register 30

If an internal VCO mode is used, programming Register 30 triggers the frequency calibration routine. This calibration routine will also generate a SYNC event. See *Clock Output Synchronization (SYNC)* for more details on a SYNC.

8.6.3.17.1 PLL2_P, PLL2 N Prescaler Divider

The PLL2 N Prescaler divides the output of the VCO as selected by Mode_MUX1 and is connected to the PLL2 N divider.

See *PLL Programming* for more information on how to program the PLL dividers to lock the PLL.

Table 105. PLL2_P, 3 Bits

R30[26:24]	DIVIDE VALUE
0 (0x00)	8
1 (0x01)	2
2 (0x02)	2
3 (0x03)	3
4 (0x04)	4
5 (0x05)	5
6 (0x06)	6
7 (0x07)	7

8.6.3.17.2 PLL2_N, PLL2 N Divider

The feeback path into the PLL2 phase detector includes the PLL2 N divider.

Each time register 30 is updated via the MICROWIRE interface, a frequency calibration routine runs to lock the VCO to the target frequency. During this calibration PLL2_N is substituted with PLL2_N_CAL.

See *PLL Programming* for more information on how to program the PLL dividers to lock the PLL.

Table 106 shows the valid values for PLL2_N.

Copyright © 2012–2017, Texas Instruments Incorporated

Table 106. PLL2_N, 18 Bits

R30[22:5]	DIVIDE
0 (0x00)	Not Valid
1 (0x01)	1
2 (0x02)	2
...	...
262,143 (0x3FFFF)	262,143

8.6.3.18 Register 31

8.6.3.18.1 READBACK_LE

Sets the required state of the LEuWire pin when performing register readback.

See *Readback*.

Table 107. READBACK_LE

R31[21]	REGISTER
0 (0x00)	LE must be low for readback
1 (0x01)	LE must be high for readback

8.6.3.18.2 READBACK_ADDR

Sets the address of the register to read back when performing readback.

When reading register 12, the READBACK_ADDR will be read back at R12[20:16].

When reading back from R31 bits 6 to 31 should be ignored. Only uWire_LOCK is valid.

See *Register Readback* for more information on readback.

Copyright © 2012–2017, Texas Instruments Incorporated

Table 108. READBACK_ADDR, 5 Bits

R31[20:16]	REGISTER
0 (0x00)	R0
1 (0x01)	R1
2 (0x02)	R2
3 (0x03)	R3
4 (0x04)	R4
5 (0x05)	R5
6 (0x06)	R6
7 (0x07)	R7
8 (0x08)	R8
9 (0x09)	Reserved
10 (0x0A)	R10
11 (0x0B)	R11
12 (0x0C)	R12
13 (0x0D)	R13
14 (0x0E)	R14
15 (0x0F)	R15
16 (0x10)	Reserved
17 (0x11)	Reserved
...	...
22 (0x16)	Reserved
23 (0x17)	Reserved
24 (0x18)	R24
25 (0x19)	R25
26 (0x1A)	R26
27 (0x1B)	R27
28 (0x1C)	R28
29 (0x1D)	R29
30 (0x1E)	R30
31 (0x1F)	R31

8.6.3.18.3 uWire_LOCK

Setting uWire_LOCK will prevent any changes to uWire registers R0 to R30. Only by clearing the uWire_LOCK bit in R31 can the uWire registers be unlocked and written to once more.

It is not necessary to lock the registers to perform a readback operation.

Table 109. uWire_LOCK

R31[5]	STATE
0	Registers unlocked
1	Registers locked, Write-protect

Copyright © 2012–2017, Texas Instruments Incorporated

9 Application and Implementation

NOTE

Information in the following applications sections is not part of the TI component specification, and TI does not warrant its accuracy or completeness. TI's customers are responsible for determining suitability of components for their purposes. Customers should validate and test their design implementation to confirm system functionality.

9.1 Application Information

To assist customers in frequency planning and design of loop filters, Texas Instruments provides the Clock Design Tool and Clock Architect.

9.1.1 Loop Filter

Each PLL of the LMK04906 requires a dedicated loop filter.

9.1.1.1 PLL1

The loop filter for PLL1 must be connected to the CPout1 pin. Figure 20 shows a simple 2-pole loop filter. The output of the filter drives an external VCXO module or discrete implementation of a VCXO using a crystal resonator and external varactor diode. Higher order loop filters may be implemented using additional external R and C components. It is recommended the loop filter for PLL1 result in a total closed loop bandwidth in the range of 10 Hz to 200 Hz. The design of the loop filter is application specific and highly dependent on parameters such as the phase noise of the reference clock, VCXO phase noise, and phase detector frequency for PLL1. TI's Clock Conditioner Owner's Manual covers this topic in detail and TI's Clock Design Tool can be used to simulate loop filter designs for both PLLs.

These resources may be found: Clock and Timing landing page.

9.1.1.2 PLL2

As shown in Figure 20, the charge pump for PLL2 is directly connected to the optional internal loop filter components, which are normally used only if either a third or fourth pole is needed. The first and second poles are implemented with external components. The loop must be designed to be stable over the entire application-specific tuning range of the VCO. The designer should note the range of K_{VCO} listed in *Electrical Characteristics* and how this value can change over the expected range of VCO tuning frequencies. Because loop bandwidth is directly proportional to K_{VCO}, the designer should model and simulate the loop at the expected extremes of the desired tuning range, using the appropriate values for K_{VCO}.

When designing with the integrated loop filter of the LMK04906 family, considerations for minimum resistor thermal noise often lead one to the decision to design for the minimum value for integrated resistors, R3 and R4.

Both the integrated loop filter resistors (R3 and R4) and capacitors (C3 and C4) also restrict the maximum loop bandwidth. However, these integrated components do have the advantage that they are closer to the VCO and can therefore filter out some noise and spurs better than external components. For this reason, a common strategy is to minimize the internal loop filter resistors and then design for the largest internal capacitor values that permit a wide enough loop bandwidth. In situations where spur requirements are very stringent and there is margin on phase noise, a feasible strategy would be to design a loop filter with integrated resistor values larger than their minimum value.

Copyright © 2012–2017, Texas Instruments Incorporated

Application Information (continued)

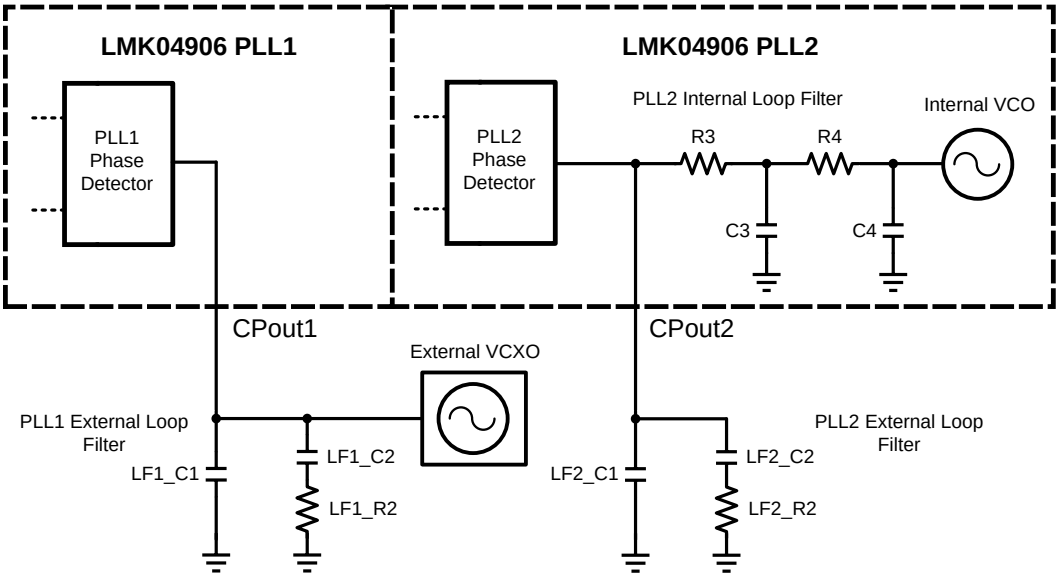

Figure 20. PLL1 and PLL2 Loop Filters

9.1.2 Driving CLKin and OSCin Inputs

9.1.2.1 Driving CLKin Pins With a Differential Source

Both CLKin ports can be driven by differential signals. It is recommended that the input mode be set to bipolar (CLKinX_BUF_TYPE = 0) when using differential reference clocks. The LMK04906 family internally biases the input pins so the differential interface should be AC coupled. The recommended circuits for driving the CLKin pins with either LVDS or LVPECL are shown in Figure 21 and Figure 22.

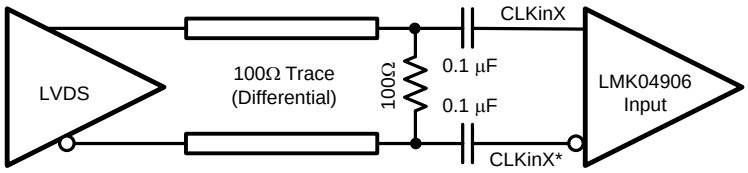

Figure 21. CLKinX/X* Termination for an LVDS Reference Clock Source

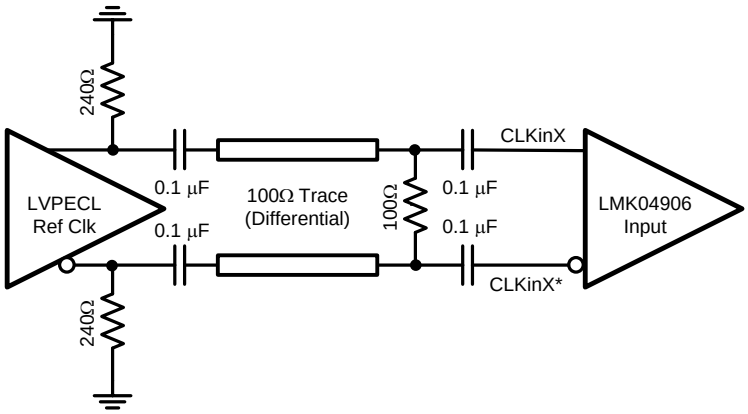

Figure 22. CLKinX/X* Termination for an LVPECL Reference Clock Source

Copyright © 2012–2017, Texas Instruments Incorporated

Application Information (continued)

Finally, a reference clock source that produces a differential sine wave output can drive the CLKin pins using the following circuit. Note: the signal level must conform to the requirements for the CLKin pins listed in *Electrical Characteristics*.

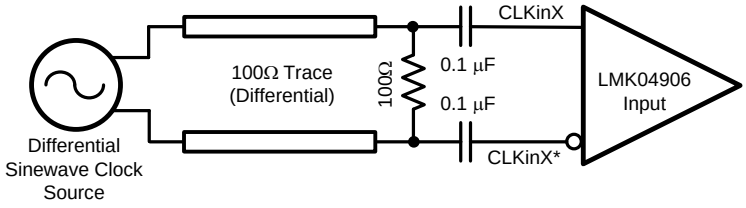

Figure 23. CLKinX/X* Termination for a Differential Sinewave Reference Clock Source

9.1.2.2 Driving CLKin Pins With a Single-Ended Source

The CLKin pins of the LMK04906 family can be driven using a single-ended reference clock source, for example, either a sine wave source or an LVCMOS/LVTTL source. Either AC coupling or DC coupling may be used. In the case of the sine wave source that is expecting a 50-Ω load, it is recommended that AC coupling be used as shown in the circuit below with a 50-Ω termination.

NOTE

The signal level must conform to the requirements for the CLKin pins listed in the Electrical Characteristics table. CLKinX_BUF_TYPE in Register 11 is recommended to be set to bipolar mode (CLKinX_BUF_TYPE = 0).

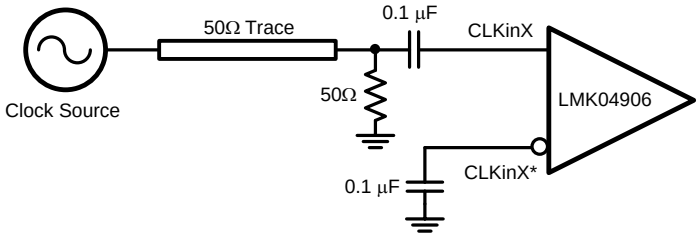

Figure 24. CLKinX/X* Single-Ended Termination

If the CLKin pins are being driven with a single-ended LVCMOS/LVTTL source, either DC coupling or AC coupling may be used. If DC coupling is used, the CLKinX_BUF_TYPE should be set to MOS buffer mode (CLKinX_BUF_TYPE = 1) and the voltage swing of the source must meet the specifications for DC coupled, MOS-mode clock inputs given in the table of Electrical Characteristics. If AC coupling is used, the CLKinX_BUF_TYPE should be set to the bipolar buffer mode (CLKinX_BUF_TYPE = 0). The voltage swing at the input pins must meet the specifications for AC coupled, bipolar mode clock inputs given in the table of Electrical Characteristics. In this case, some attenuation of the clock input level may be required. A simple resistive divider circuit before the AC coupling capacitor is sufficient.

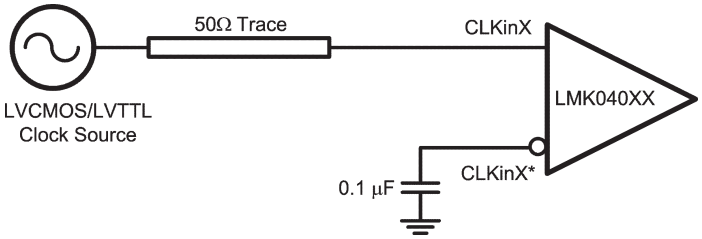

Figure 25. DC Coupled LVCMOS/LVTTL Reference Clock

Application Information (continued)

9.1.3 Termination and Use of Clock Output (Drivers)

When terminating clock drivers keep in mind these guidelines for optimum phase noise and jitter performance:

- Transmission line theory should be followed for good impedance matching to prevent reflections.
- Clock drivers should be presented with the proper loads. For example:
  - LVDS drivers are current drivers and require a closed current loop.
  - LVPECL drivers are open emitters and require a DC path to ground.
- Receivers should be presented with a signal biased to their specified DC bias level (common mode voltage) for proper operation. Some receivers have self-biasing inputs that automatically bias to the proper voltage level. In this case, the signal should normally be AC coupled.

It is possible to drive a non-LVPECL or non-LVDS receiver with an LVDS or LVPECL driver as long as the above guidelines are followed. Check the datasheet of the receiver or input being driven to determine the best termination and coupling method to be sure that the receiver is biased at its optimum DC voltage (common mode voltage). For example, when driving the OSCin/OSCin* input of the LMK04906 family, OSCin/OSCin* should be AC coupled because OSCin/OSCin* biases the signal to the proper DC level (See Figure 39) This is only slightly different from the AC coupled cases described in *Driving CLKin Pins With a Single-Ended Source* because the DC blocking capacitors are placed between the termination and the OSCin/OSCin* pins, but the concept remains the same. The receiver (OSCin/OSCin*) sets the input to the optimum DC bias voltage (common mode voltage), not the driver.

9.1.3.1 Termination for DC Coupled Differential Operation

For DC coupled operation of an LVDS driver, terminate with 100 Ω as close as possible to the LVDS receiver as shown in Figure 26.

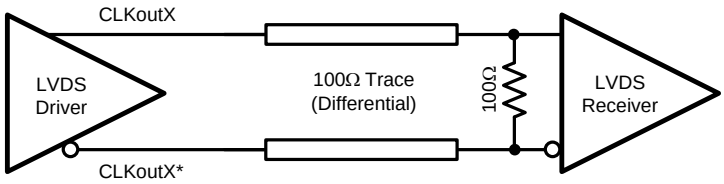

Figure 26. Differential LVDS Operation, DC Coupling, No Biasing of the Receiver

For DC coupled operation of an LVPECL driver, terminate with 50 Ω to V_{CC} – 2 V as shown in Figure 27. Alternatively terminate with a Thevenin equivalent circuit (120-Ω resistor connected to V_{CC} and an 82-Ω resistor connected to ground with the driver connected to the junction of the 120-Ω and 82-Ω resistors) as shown in Figure 28 for V_{CC} = 3.3 V.

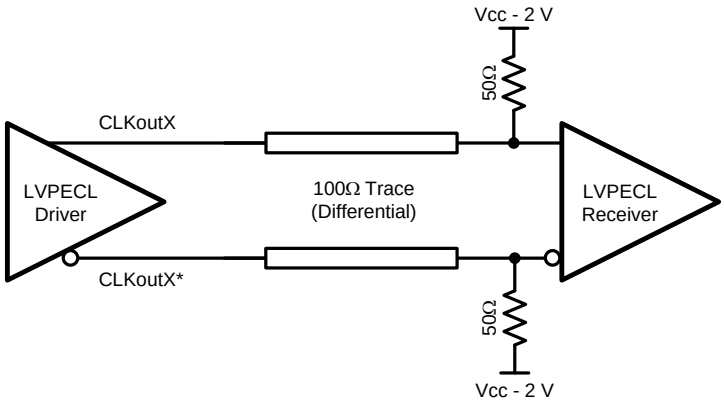

Figure 27. Differential LVPECL Operation, DC Coupling

Copyright © 2012–2017, Texas Instruments Incorporated

Application Information (continued)

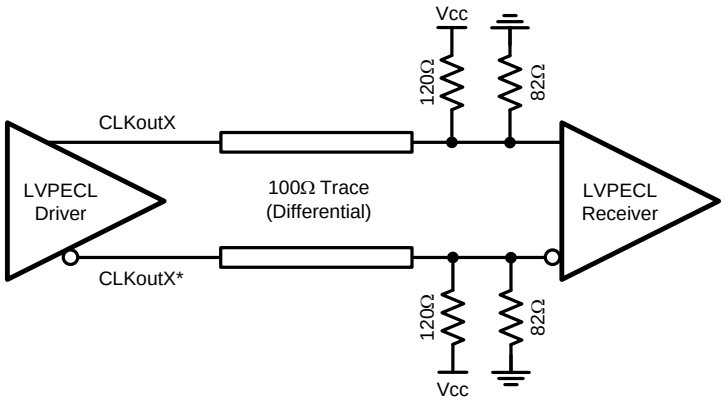

Figure 28. Differential LVPECL Operation, DC Coupling, Thevenin Equivalent

9.1.3.2 Termination for AC Coupled Differential Operation

AC coupling allows for shifting the DC bias level (common mode voltage) when driving different receiver standards. Since AC coupling prevents the driver from providing a DC bias voltage at the receiver it is important to ensure the receiver is biased to its ideal DC level.

When driving non-biased LVDS receivers with an LVDS driver, the signal may be AC coupled by adding DC blocking capacitors; however, the proper DC bias point needs to be established at the receiver. One way to do this is with the termination circuitry in Figure 29.

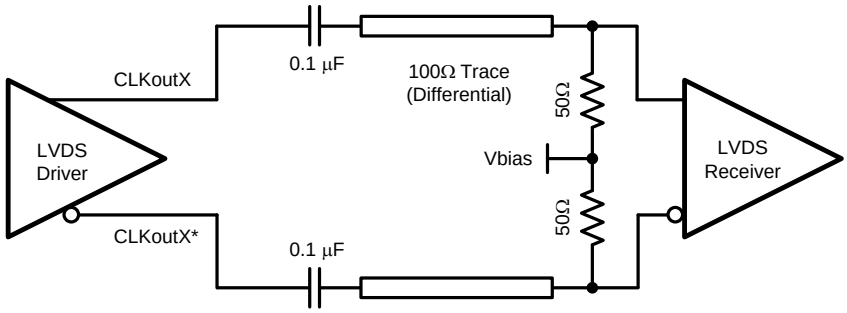

Figure 29. Differential LVDS Operation, AC Coupling, External Biasing at the Receiver

Some LVDS receivers may have internal biasing on the inputs. In this case, the circuit shown in Figure 29 is modified by replacing the 50-Ω terminations to Vbias with a single 100-Ω resistor across the input pins of the receiver, as shown in Figure 30. When using AC coupling with LVDS outputs, there may be a start-up delay observed in the clock output due to capacitor charging. The previous figures employ a 0.1-µF capacitor. This value may need to be adjusted to meet the start-up requirements for a particular application.

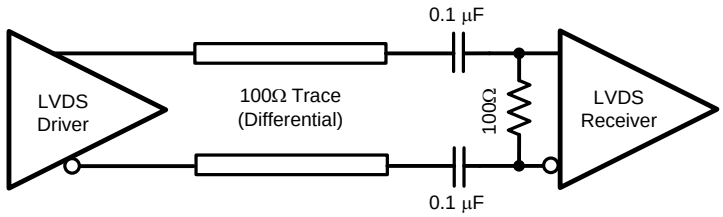

Figure 30. LVDS Termination for a Self-Biased Receiver

Copyright © 2012–2017, Texas Instruments Incorporated

Application Information (continued)

LVPECL drivers require a DC path to ground. When AC coupling an LVPECL signal use 120-Ω emitter resistors close to the LVPECL driver to provide a DC path to ground as shown in Figure 31. For proper receiver operation, the signal should be biased to the DC bias level (common mode voltage) specified by the receiver. The typical DC bias voltage for LVPECL receivers is 2 V. A Thevenin equivalent circuit (82-Ω resistor connected to V_{CC} and a 120-Ω resistor connected to ground with the driver connected to the junction of the 82-Ω and 120-Ω resistors) is a valid termination as shown in Figure 31 for V_{CC} = 3.3 V. Note this Thevenin circuit is different from the DC coupled example in Figure 28.

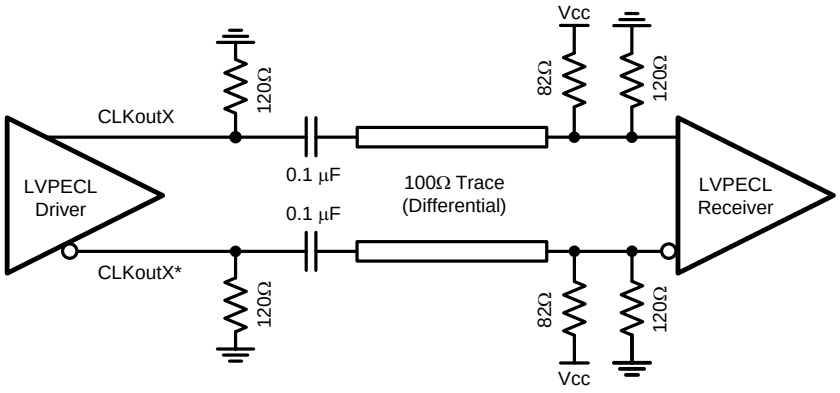

Figure 31. Differential LVPECL Operation, AC Coupling, Thevenin Equivalent, External Biasing at the Receiver

9.1.3.3 Termination for Single-Ended Operation

A balun can be used with either LVDS or LVPECL drivers to convert the balanced, differential signal into an unbalanced, single-ended signal.

It is possible to use an LVPECL driver as one or two separate 800 mVpp signals. When using only one LVPECL driver of a CLKoutX/CLKoutX* pair, be sure to properly terminated the unused driver. When DC coupling one of the LMK04906 family clock LVPECL drivers, the termination should be 50 Ω to V_{CC} – 2 V as shown in Figure 32. The Thevenin equivalent circuit is also a valid termination as shown in Figure 33 for Vcc = 3.3 V.

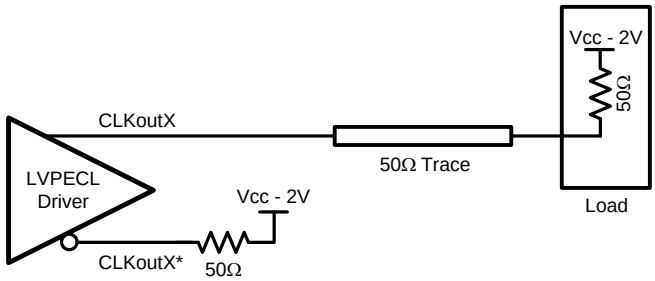

Figure 32. Single-Ended LVPECL Operation, DC Coupling

Copyright © 2012–2017, Texas Instruments Incorporated

Application Information (continued)

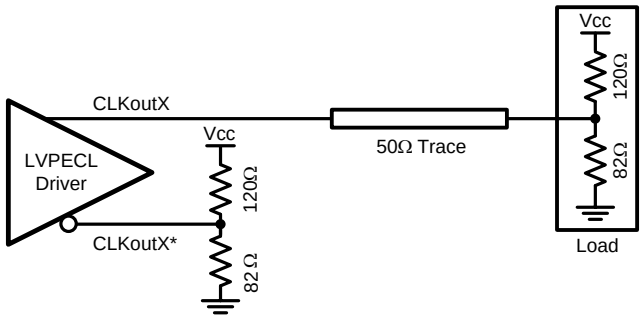

Figure 33. Single-Ended LVPECL Operation, DC Coupling, Thevenin Equivalent

When AC coupling an LVPECL driver use a 120 Ω emitter resistor to provide a DC path to ground and ensure a 50-Ω termination with the proper DC bias level for the receiver. The typical DC bias voltage for LVPECL receivers is 2 V (See *Driving CLKin Pins With a Single-Ended Source*). If the companion driver is not used it should be terminated with either a proper AC or DC termination. This latter example of AC coupling a single-ended LVPECL signal can be used to measure single-ended LVPECL performance using a spectrum analyzer or phase noise analyzer. When using most RF test equipment no DC bias point (0 VDC) is required for safe and proper operation. The internal 50 Ω termination of the test equipment correctly terminates the LVPECL driver being measured as shown in Figure 34.

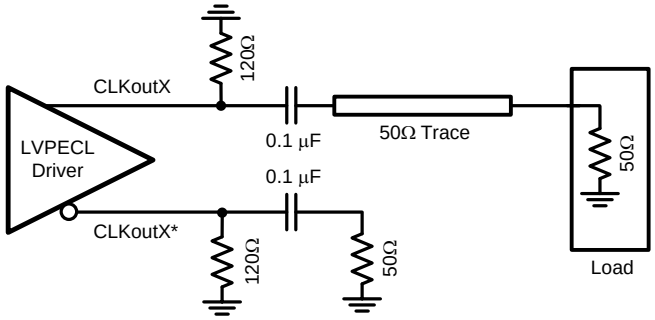

Figure 34. Single-Ended LVPECL Operation, AC-Coupling

9.1.4 Frequency Planning With the LMK04906 Family

Calculating the value of the output dividers for use with the LMK04906 family is simple due to the architecture of the LMK04906. That is, the VCO divider may be bypassed and the clock output dividers allow for even and odd output divide values from 2 to 1045. For most applications it is recommended to bypass the VCO divider.

The procedure for determining the needed LMK04906 device and clock output divider values for a set of clock output frequencies is straightforward.

1. Calculate the least common multiple (LCM) of the clock output frequencies.
2. Determine which VCO ranges will support the target clock output frequencies given the LCM.
3. Determine the clock output divide values based on VCO frequency.
4. Determine the PLL2 reference frequency doubler mode and PLL2_P, PLL2_N, and PLL2_R divider values given the OSCin VCXO or crystal frequency and VCO frequency.

For example, given the following target output frequencies: 200 MHz, 120 MHz, and 25 MHz with a VCXO frequency of 40 MHz:

Copyright © 2012–2017, Texas Instruments Incorporated

Application Information (continued)

First determine the LCM of the three frequencies. LCM(200 MHz, 120 MHz, 25 MHz) = 600 MHz. The LCM frequency is the lowest frequency for which all of the target output frequencies are integer divisors of the LCM. *Note, if there is one frequency which causes the LCM to be very large, greater than 3 GHz for example, determine if there is a single frequency requirement which causes this. It may be possible to select the VCXO/crystal frequency to satisfy this frequency requirement through OSCout or CLKout3/4 driven by OSCin. In this way it is possible to get non-integer related frequencies at the outputs.*

Second, since the LCM is not in a VCO frequency range supported by the LMK04906, multiply the LCM frequency by an integer which causes it to fall into a valid VCO frequency range of an LMK04906 device. In this case 600 MHz * 4 = 2400 MHz which is valid for the LMK04906.

Third, continuing the example by using a VCO frequency of 2400 MHz and the LMK04906, the CLKout dividers can be calculated by simply dividing the VCO frequency by the output frequency. To output 200 MHz, 120 MHz, and 25 MHz the output dividers will be 12, 20, and 96 respectively.

- 2400 MHz / 200 MHz = 12
- 2400 MHz / 120 MHz = 20
- 2400 MHz / 25 MHz = 96

Fourth, PLL2 must be locked to its input reference. See *PLL Programming* for more information on this topic. By programming the clock output dividers and the PLL2 dividers the VCO can lock to the frequency of 2400 MHz and the clock outputs dividers will each divide the VCO frequency down to the target output frequencies of 200 MHz, 120 MHz, and 25 MHz.

NOTE

Refer to application note AN-1865 Frequency Synthesis and Planning for PLL Architectures for more information on this topic and LCM calculations.

9.1.5 PLL Programming

To lock a PLL the divided reference and divided feedback from VCO or VCXO must result in the same phase detector frequency. The tables below illustrate how the divides are structured for the reference path (R) and feedback path (N) depending on the MODE of the device.

Table 110. PLL1 Phase Detector Frequency — Reference Path (R)

MODE	(R) PLL1 PDF =
All	CLKinX Frequency / CLKinX_PreR_DIV / PLL1_R

Table 111. PLL1 Phase Detector Frequency — Feedback Path (N)

MODE	VCO_MUX	OSCout0	PLL1 PDF (N) =
Internal VCO Dual PLL	—	Bypass	VCXO Frequency / PLL1_N
	—	Divided	VCXO Frequency / OSCin_DIV / PLL1_N
Internal VCO /w 0-delay	Bypass	—	VCO Frequency / CLKoutX_DIV / PLL1_N (1)
	Divided	—	VCO Frequency / VCO_DIV / CLKoutX_DIV / PLL1_N (1)

(1) The actual CLKoutX_DIV used is selected by *FEEDBACK_MUX*.

Table 112. PLL2 Phase Detector Frequency — Reference Path (R)

EN_PLL2_REF_2X	PLL2 PDF (R) =
Disabled	OSCin Frequency / PLL2_R (1)
Enabled	OSCin Frequency * 2 / PLL2_R (1)

(1) For applications in which the OSCin frequency and PLL2 phase detector frequency are equal, the best PLL2 in-band noise can be achieved when the doubler is enabled (EN_PLL2_REF_2X = 1) and the PLL2 R divide value is 2. Do not use doubler disabled (EN_PLL2_REF_2X = 0) and PLL2 R divide value of 1.

Copyright © 2012–2017, Texas Instruments Incorporated

Table 113. PLL2 Phase Detector Frequency — Feedback Path (N)

MODE	VCO_MUX	PLL2 PDF (N) =
Dual PLL	VCO	VCO Frequency / PLL2_P / PLL2_N
Dual PLL /w 0-delay		
Single PLL		
Dual PLL	VCO Divider	VCO Frequency / VCO_DIV / PLL2_P / PLL2_N
Dual PLL /w 0-delay		
Single PLL		
Dual PLL External VCO	—	VCO Frequency / VCO_DIV / PLL2_P / PLL2_N
Dual PLL External VCO /w 0-delay		
Single PLL /w 0-delay	VCO	VCO Frequency / CLKoutX_DIV / PLL2_N
	VCO Divider	VCO Frequency / VCO_DIV / CLKoutX_DIV / PLL2_N

Table 114. PLL2 Phase Detector Frequency — Feedback Path (N) during VCO Frequency Calibration

MODE	VCO_MUX	PLL2 PDF (N_CAL) =
All Internal VCO Modes	VCO	VCO Frequency / PLL2_P / PLL2_N_CAL
	VCO Divider	VCO Frequency / VCO_DIV / PLL2_P / PLL2_N_CAL

9.1.5.1 Example PLL2 N Divider Programming

To program PLL2 to lock an LMK04906 using Dual PLL mode to a VCO frequency of 2400 MHz using a 40 MHz VCXO reference, first determine the total PLL2 N divide value. This is VCO Frequency / PLL2 phase detector frequency. This example assumes the PLL2 reference frequency doubler is enabled and a PLL2 R divider value of 2 (1) which results in PLL2 R divide value of 1 which results in PLL2 phase detector frequency the same as PLL2 reference frequency (40 MHz). 2400 MHz / 40 MHz = 60, so the total PLL2 N divide value is 60.

The dividers in the PLL2 N feedback path for Dual PLL mode include PLL2_P and PLL2_N. PLL2_P can be programmed from 2 to 8 even and odd. PLL2_N can be programmed from 1 to 263,143 even and odd. Since the total PLL2 N divide value of 60 contains the factors 2, 2, 3, and 5, it would be allowable to program PLL2_P to 2, 3 or 5. It is simplest to use the smallest divide, so PLL2_P = 2, and PLL2_N = 30 which results in a Total PLL2 N = 60.

For this example and in most cases, PLL2_N_CAL will have the same value as PLL2_N. However when using Single PLL mode with 0-delay, the values will differ. When using an external VCO, PLL2_N_CAL value is unused.

9.1.6 Digital Lock Detect Frequency Accuracy

The digital lock detect circuit is used to determine PLL1 locked, PLL2 locked, and holdover exit events. A window size and lock count register are programmed to set a ppm frequency accuracy of reference to feedback signals of the PLL for each event to occur. When a PLL digital lock event occurs the PLL's digital lock detect is asserted true. When the holdover exit event occurs, the device will exit holdover mode.

EVENT	PLL	WINDOW SIZE	LOCK COUNT
PLL1 Locked	PLL1	PLL1_WND_SIZE	PLL1_DLD_CNT
PLL2 Locked	PLL2	PLL2_WND_SIZE	PLL2_DLD_CNT
Holdover exit	PLL1	PLL1_WND_SIZE	HOLDOVER_DLD_CNT

(1) For applications in which the OSCin frequency and PLL2 phase detector frequency are equal, the best PLL2 in-band noise can be achieved when the doubler is enabled (EN_PLL2_REF_2X = 1) and the PLL2 R divide value is 2. Do not use doubler disabled (EN_PLL2_REF_2X = 0) and PLL2 R divide value of 1.

For a digital lock detect event to occur there must be a “lock count” number of phase detector cycles of PLLX during which the time/phase error of the PLLX_R reference and PLLX_N feedback signal edges are within the user programmable "window size." Since there must be at least "lock count" phase detector events before a lock event occurs, a minimum digital lock event time can be calculated as "lock count" / f_{PDX} where X = 1 for PLL1 or 2 for PLL2.

Copyright © 2012–2017, Texas Instruments Incorporated

By using Equation 4, values for a *lock count* and *window size* can be chosen to set the frequency accuracy required by the system in ppm before the digital lock detect event occurs:

$$ppm = \frac{1e6 \times PLLX_WND_SIZE \times f_{PDX}}{PLLX_DLD_CNT} \quad (4)$$

The effect of the *lock count* value is that it shortens the effective lock window size by dividing the *window size* by *lock count*.

If at any time the PLLX_R reference and PLLX_N feedback signals are outside the time window set by *window size*, then the *lock count* value is reset to 0.

9.1.6.1 Minimum Lock Time Calculation Example

To calculate the minimum PLL2 digital lock time given a PLL2 phase detector frequency of 40 MHz and PLL2_DLD_CNT = 10,000. Then the minimum lock time of PLL2 will be 10,000 / 40 MHz = 250 µs.

9.1.7 Calculating Dynamic Digital Delay Values For Any Divide

This section explains how to calculate the dynamic digital delay for any divide value.

Dynamic digital delay allows the time offset between two or more clock outputs to be adjusted with no or minimal interruption of clock outputs. Since the clock outputs are operating at a known frequency, the time offset can also be expressed as a phase shift. When dynamically adjusting the digital delay of clock outputs with different frequencies the phase shift should be expressed in terms of the higher frequency clock. The step size of the smallest time adjustment possible is equal to half the period of the Clock Distribution Path, which is the VCO frequency (Equation 2) or the VCO frequency divided by the VCO divider (Equation 3) if not bypassed. The smallest degree phase adjustment with respect to a clock frequency will be 360 * the smallest time adjustment * the clock frequency. The total number of phase offsets that the LMK04906 family is able to achieve using dynamic digital delay is equal 1 / (higher clock frequency * the smallest phase adjustment).

Equation 5 calculates the digital delay value that must be programmed for a synchronizing clock to achieve a 0 time/phase offset from the qualifying clock. Once this digital delay value is known, it is possible to calculate the digital delay value for any phase offset. The qualifying clock for dynamic digital delay is selected by the FEEDBACK_MUX. When dynamic digital delay is engaged with same clock output used for the qualifying clock and the new synchronized clock, it is termed relative dynamic digital delay since causing another SYNC event with the same digital delay value will offset the clock by the same phase once again. The important part of relative dynamic digital delay is that the CLKoutX_HS must be programmed correctly when the SYNC event occurs (Table 6). This can result in needing to program the device twice. Once to set the new CLKoutX_DDLY with CLKoutX_HS as required for the SYNC event, and again to set the CLKoutX_HS to its desired value.

Digital delay values are programmed using the CLKoutX_DDLY and CLKoutX_HS registers as shown in Equation 6. For example, to achieve a digital delay of 13.5, program CLKoutX_DDLY = 14 and CLKoutX_HS = 1.

$$0 \text{ digital delay} = \left(\left(\left[\frac{16}{CLKoutX_DIV} \right] + 0.5 \right) \times CLKoutX_DIV \right) - 11.5 \quad (5)$$

Equation 5 uses the ceiling operator. To find the ceiling of a fractional number round up. An integer remains the same value.

$$\text{Digital delay} = CLKoutX_DDLY - (0.5 * CLKoutX_HS) \quad (6)$$

Note: since the digital delay value for 0 time/phase offset *is a function of the qualifying clock's divide value*, the resulting digital delay value can be used for any clock output operating at any frequency to achieve a 0 time/phase offset from the qualifying clock. Therefore the calculated time shift table will also be the same as in Table 115

9.1.7.1 Example

Consider a system with:

- A VCO frequency of 2000 MHz.
- The VCO divider is bypassed, therefore the clock distribution path frequency is 2000 MHz.
- CLKout0_DIV = 10 resulting in a 200 MHz frequency on CLKout0.

Copyright © 2012–2017, Texas Instruments Incorporated

- CLKout2_DIV = 20 resulting in a 100 MHz frequency on CLKout2.

For this system the minimum time adjustment is 0.25 ns, which is 0.5 / (2000 MHz). Since the higher frequency is 200 MHz, phase adjustments will be calculated with respect to the 200 MHz frequency. The 0.25 ns minimum time adjustment results in a minimum phase adjustment of 18 degrees, which is 360 degrees / 200 MHz * 0.25 ns.

To calculate the digital delay value to achieve a 0 time/phase shift of CLKout2 when CLKout0 is the qualifying clock. Solve Equation 5 using the divide value of 10. To solve the equation 16/10 = 1.6, the ceiling of 1.6 is 2. Then to finish solving the equation solve (2 + 0.5) * 10 - 11.5 = 13.5. A digital delay value of 13.5 is programmed by setting CLKout2_DDLY = 14 and CLKout2_HS = 1.

To calculate the digital delay value to achieve a 0 time/phase shift of CLKout0 when CLKout2 is the qualifying clock, solve Equation 5 using the divide value of CLKout2, which is 20. This results in a digital delay of 18.5 which is programmed as CLKout0_DDLY = 19 and CLKout0_HS = 1.

Once the 0 time/phase shift digital delay programming value is known a table can be constructed with the digital delay value to be programmed for any time/phase offset by decrementing or incrementing the digital delay value by 0.5 for the minimum time/phase adjustment.

A complete filled out table for use of CLKout0 as the qualifying clock is shown in Table 115. It was created by entering a digital delay of 13.5 for 0 degree phase shift, then decrementing the digital delay down to the minimum value of 4.5. Since this did not result in all the possible phase shifts, the digital delay was then incremented from 13.5 to 14.0 to complete all possible phase shifts.

Copyright © 2012–2017, Texas Instruments Incorporated

Table 115. Example Digital Delay Calculation

DIGITAL DELAY	CALCULATED TIME SHIFT (ns)	RELATIVE TIME SHIFT TO 200 MHz (ns)	PHASE SHIFT OF 200 MHZ (DEGREES)
4.5	–4.5	0.5	36
5	–4.25	0.75	54
5.5	–4	1	72
6	–3.75	1.25	90
6.5	–3.5	1.5	108
7	–3.25	1.75	126
7.5	–3	2	144
8	–2.75	2.25	162
8.5	–2.5	2.5	180
9	–2.25	2.75	198
9.5	–2	3	216
10	–1.75	3.25	234
10.5	–1.5	3.5	252
11	–1.25	3.75	270
11.5	–1	4	288
12	–0.75	4.25	306
12.5	–0.5	4.5	324
13	–0.25	4.75	342
13.5	**0**	**0**	**0**
14	0.25	0.25	18
14.5	0.5	0.5	36

Observe that the digital delay value of 4.5 and 14.5 will achieve the same relative time shift/phase delay. However programming a digital delay of 14.5 will result in a clock off time for the synchronizing clock to achieve the same phase time shift/phase delay.

Digital delay value is programmed as CLKoutX_DDLY — (0.5 × CLKoutX_HS). So to achieve a digital delay of 13.5, program CLKoutX_DDLY = 14 and CLKoutX_HS = 1. To achieve a digital delay of 14, program CLKoutX_DDLY = 14 and CLKoutX_HS = 0.

9.1.8 Optional Crystal Oscillator Implementation (OSCin/OSCin*)

The LMK04906 family features supporting circuitry for a discretely implemented oscillator driving the OSCin port pins. Figure 35 illustrates a reference design circuit for a crystal oscillator:

Copyright © 2012–2017, Texas Instruments Incorporated

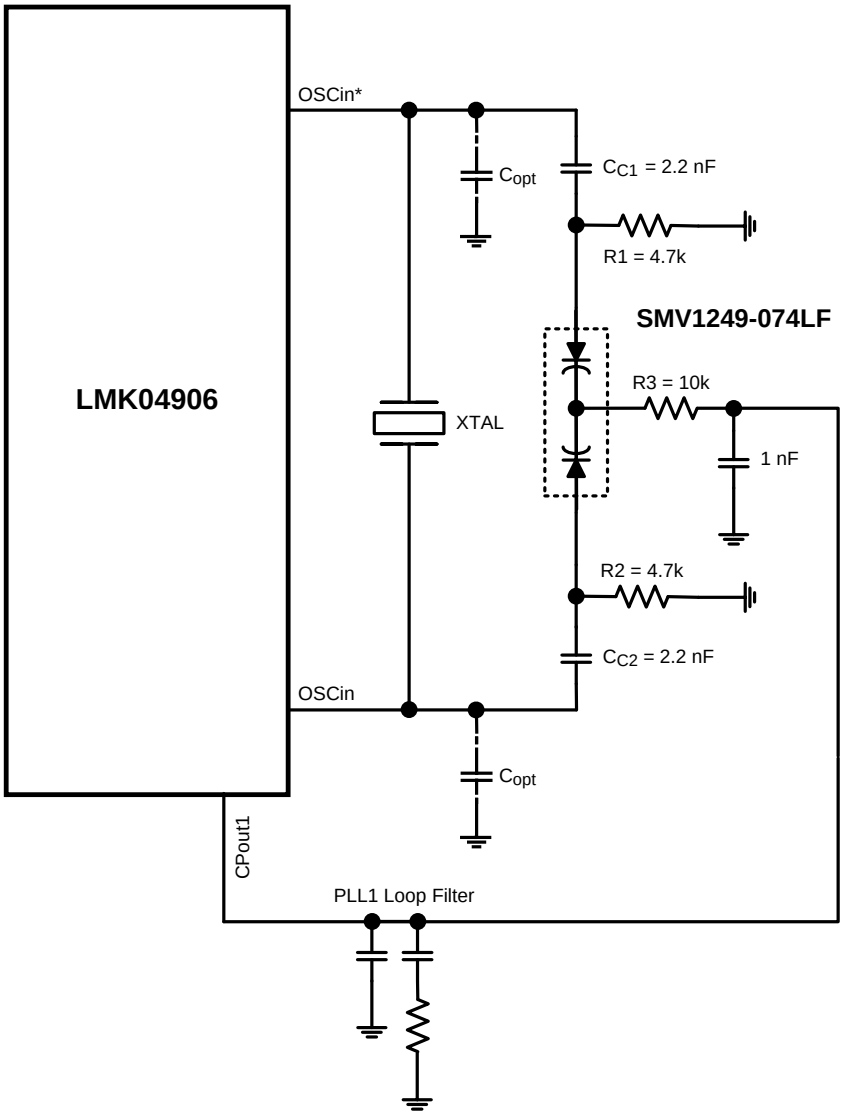

Figure 35. Reference Design Circuit for Crystal Oscillator Option

This circuit topology represents a parallel resonant mode oscillator design. When selecting a crystal for parallel resonance, the total load capacitance, C_L, must be specified. The load capacitance is the sum of the tuning capacitance (C_{TUNE}), the capacitance seen looking into the OSCin port (C_{IN}), and stray capacitance due to PCB parasitics (C_{STRAY}), and is given by Equation 7.

$$C_L = C_{TUNE} + C_{IN} + \frac{C_{STRAY}}{2} \quad (7)$$

C_{TUNE} is provided by the varactor diode shown in Figure 35, Skyworks model SMV1249-074LF. A dual diode package with common cathode provides the variable capacitance for tuning. The single diode capacitance ranges from approximately 31 pF at 0.3 V to 3.4 pF at 3 V. The capacitance range of the dual package (anode to anode) is approximately 15.5 pF at 3 V to 1.7 pF at 0.3 V. The desired value of V_{TUNE} applied to the diode should be $V_{CC}/2$, or 1.65 V for V_{CC} = 3.3 V. The typical performance curve from the data sheet for the SMV1249-074LF indicates that the capacitance at this voltage is approximately 6 pF (12 pF / 2).

The nominal input capacitance (C_{IN}) of the LMK04906 family OSCin pins is 6 pF. The stray capacitance (C_{STRAY}) of the PCB should be minimized by arranging the oscillator circuit layout to achieve trace lengths as short as possible and as narrow as possible trace width (50-Ω characteristic impedance is not required). As an example, assume that C_{STRAY} is 4 pF. The total load capacitance is nominally:

Copyright © 2012–2017, Texas Instruments Incorporated

$$C_L = 6 + 6 + \frac{4}{2} = 14 \text{ pF} \tag{8}$$

Consequently the load capacitance specification for the crystal in this case should be nominally 14 pF.

The 2.2-nF capacitors shown in the circuit are coupling capacitors that block the DC tuning voltage applied by the 4.7-kΩ and 10-kΩ resistors. The value of these coupling capacitors should be large, relative to the value of C_{TUNE} ($C_{C1} = C_{C2} >> C_{TUNE}$), so that C_{TUNE} becomes the dominant capacitance.

For a specific value of C_L, the corresponding resonant frequency (F_L) of the parallel resonant mode circuit is:

$$F_L = F_S \bullet \left\{ \frac{C_1}{2(C_0 + C_{L1})} + 1 \right\} = F_S \bullet \left\{ \frac{1}{2\left(\frac{C_0}{C_1} + \frac{C_L}{C_1}\right)} + 1 \right\} \tag{9}$$

where

- F_S = Series resonant frequency
- C_1 = Motional capacitance of the crystal
- C_L = Load capacitance
- C_0 = Shunt capacitance of the crystal, specified on the crystal datasheet

The normalized tuning range of the circuit is closely approximated by:

$$\frac{\Delta F}{F} = \frac{F_{CL1} - F_{CL2}}{F_{FCL1}} = \frac{C_1}{2} \bullet \left\{ \frac{1}{(C_0 + C_{L1})} - \frac{1}{(C_0 + C_{L2})} \right\} = \frac{1}{2} \bullet \left\{ \frac{1}{\left(\frac{C_0}{C_1} + \frac{C_{L1}}{C_1}\right)} - \frac{1}{\left(\frac{C_0}{C_1} + \frac{C_{L2}}{C_1}\right)} \right\} \tag{10}$$

C_{L1}, C_{L2} = The endpoints of the circuit's load capacitance range, assuming a variable capacitance element is one component of the load. F_{CL1}, F_{CL2} = parallel resonant frequencies at the extremes of the circuit's load capacitance range.

A common range for the pullability ratio, C_0/C_1, is 250 to 280. The ratio of the load capacitance to the shunt capacitance is approximately (n × 1000), n < 10. Hence, picking a crystal with a smaller pullability ratio supports a wider tuning range because this allows the scale factors related to the load capacitance to dominate.

Examples of the phase noise and jitter performance of the LMK04906 with a crystal oscillator are shown in Table 116. This table illustrates the clock output phase noise when a 20.48-MHz crystal is paired with PLL1.

Copyright © 2012–2017, Texas Instruments Incorporated

Table 116. Example RMS Jitter and Clock Output Phase Noise for LMK04906 With a 20.48-MHz Crystal Driving OSCin (T = 25 °C, V_{CC} = 3.3 V) (1)

INTEGRATION BANDWIDTH	CLOCK OUTPUT TYPE	PLL2 PDF = 20.48 MHz (EN_PLL2_REF2X = 0, XTAL_LVL = 3)	PLL2 PDF = 40.96 MHz (EN_PLL2_REF2X = 1, XTAL_LVL = 3)	
		f_{CLK} = 245.76 MHz	f_{CLK} = 122.88 MHz	f_{CLK} = 245.76 MHz
RMS JITTER (ps)				
100 Hz – 20 MHz	LVCMOS	374	412	382
	LVDS	419	421	372
	LVPECL 1.6 Vpp	460	448	440
10 kHz – 20 MHz	LVCMOS	226	195	190
	LVDS	231	205	194
	LVPECL 1.6 Vpp	226	191	188
PHASE NOISE (dBc/Hz)				
Offset	Clock Output Type	PLL2 PDF = 20.48 MHz (EN_PLL2_REF2X = 0, XTAL_LVL = 3)	PLL2 PDF = 40.96 MHz (EN_PLL2_REF2X = 1, XTAL_LVL = 3)	
		f_{CLK} = 245.76 MHz	f_{CLK} = 122.88 MHz	f_{CLK} = 245.76 MHz
100 Hz	LVCMOS	-87	-93	-87
	LVDS	-86	-91	-86
	LVPECL 1.6 Vpp	-86	-92	-85
1 kHz	LVCMOS	-115	-121	-115
	LVDS	-115	-123	-116
	LVPECL 1.6 Vpp	-114	-122	-116
10 kHz	LVCMOS	-117	-128	-122
	LVDS	-117	-128	-122
	LVPECL 1.6 Vpp	-117	-128	-122
100 kHz	LVCMOS	-130	-135	-129
	LVDS	-130	-135	-129
	LVPECL 1.6 Vpp	-129	-135	-129
1 MHz	LVCMOS	-150	-154	-148
	LVDS	-149	-153	-148
	LVPECL 1.6 Vpp	-150	-154	-148
40 MHz	LVCMOS	-159	-162	-159
	LVDS	-157	-159	-157
	LVPECL 1.6 Vpp	-159	-161	-159

(1) Performance data and crystal specifications contained in this section are based on Vectron model VXB1-1150-20M480, 20.48 MHz. PLL1 has a narrow loop bandwidth, PLL2 loop parameters are: C1 = 150 pF, C2 = 120 nF, R2 = 470 Ω, Charge Pump current = 3.2 mA, Phase detector frequency = 20.48 MHz or 40.96 MHz, VCO frequency = 2949.12 MHz. Loop filter was optimized for 40.96-MHz phase detector performance.

Example crystal specifications are presented in Table 117.

Table 117. Example Crystal Specifications

PARAMETER	VALUE
Nominal Frequency (MHz)	20.48
Frequency Stability, T = 25 °C	± 10 ppm
Operating temperature range	-40 °C to +85 °C
Frequency Stability, -40 °C to +85 °C	± 15 ppm
Load Capacitance	14 pF
Shunt Capacitance (C_0)	5 pF Maximum
Motional Capacitance (C_1)	20 fF ± 30%

Copyright © 2012–2017, Texas Instruments Incorporated

Table 117. Example Crystal Specifications (continued)

PARAMETER	VALUE
Equivalent Series Resistance	25 Ω Maximum
Drive level	2 mWatts Maximum
C_0/C_1 ratio	225 typical, 250 Maximum

See Figure 36 for a representative tuning curve.

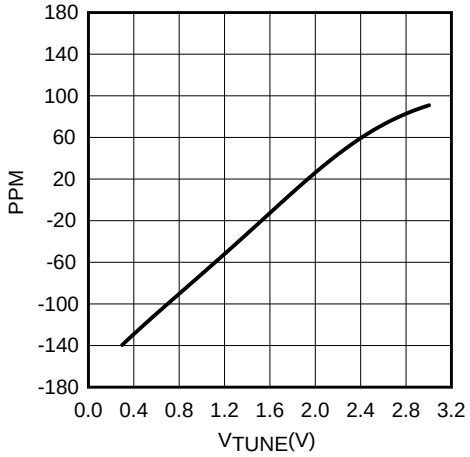

Figure 36. Example Tuning Curve, 20.48-MHz Crystal

The tuning curve achieved in the user's application may differ from the curve shown above due to differences in PCB layout and component selection.

This data is measured on the bench with the crystal integrated with the LMK04906 family. Using a voltmeter to monitor the V_{TUNE} node for the crystal, the PLL1 reference clock input frequency is swept in frequency and the resulting tuning voltage generated by PLL1 is measured at each frequency. At each value of the reference clock frequency, the lock state of PLL1 should be monitored to ensure that the tuning voltage applied to the crystal is valid.

The curve shows over the tuning voltage range of 0.3 VDC to 3.0 VDC, the frequency range is –140 to 91 ppm; or equivalently, a tuning range of –2850 Hz to 1850 Hz. The measured tuning voltage at the nominal crystal frequency (20.48 MHz) is 1.7 V. Using the diode data sheet tuning characteristics, this voltage results in a tuning capacitance of approximately 6.5 pF.

The tuning curve data can be used to calculate the gain of the oscillator (K_{VCO}). The data used in the calculations is taken from the most linear portion of the curve, a region centered on the crossover point at the nominal frequency (20.48 MHz). For a well designed circuit, this is the most likely operating range. In this case, the tuning range used for the calculations is ± 1000 Hz (± 0.001 MHz), or ± 81.4 ppm. The simplest method is to calculate the ratio:

$$K_{VCO} = \frac{\Delta F}{\Delta V} = \left(\frac{\Delta F_2 - \Delta F_1}{V_{TUNE2} - V_{TUNE1}} \right), \frac{MHz}{V} \tag{11}$$

ΔF2 and ΔF1 are in units of MHz. Using data from the curve this becomes:

$$\frac{0.001 - (-0.001)}{2.03 - 0.814} = 0.00164 \frac{MHz}{V} \tag{12}$$

A second method uses the tuning data in units of ppm:

$$K_{VCO} = \frac{F_{NOM} \bullet (\Delta ppm_2 - \Delta ppm_1)}{\Delta V \bullet 10^6} \tag{13}$$

F_{NOM} is the nominal frequency of the crystal and is in units of MHz. Using the data, this becomes:

Copyright © 2012–2017, Texas Instruments Incorporated

$$\frac{12.288 \bullet (81.4 - (-81.4))}{(2.03 - 0.814) \bullet 10^6} = 0.00164, \frac{\text{MHz}}{\text{V}} \tag{14}$$

In order to ensure startup of the oscillator circuit, the equivalent series resistance (ESR) of the selected crystal should conform to the specifications listed in *Electrical Characteristics*.

It is also important to select a crystal with adequate power dissipation capability, or *drive level*. If the drive level supplied by the oscillator exceeds the maximum specified by the crystal manufacturer, the crystal will undergo excessive aging and possibly become damaged. Drive level is directly proportional to resonant frequency, capacitive load seen by the crystal, voltage and equivalent series resistance (ESR). For more complete coverage of crystal oscillator design, see *AN-1939 Crystal Based Oscillator Design with the LMK04000 Family* (SNAA065).

9.2 Typical Application

Normal use case of the LMK04906 device is as a dual loop jitter cleaner. This section will discuss a design example to illustrate the various functional aspects of the LMK04906 device.

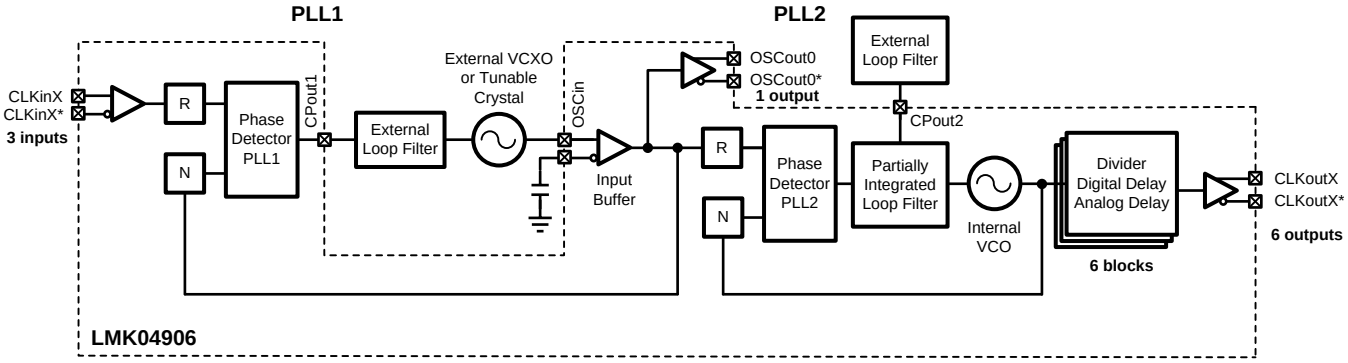

Copyright © 2016, Texas Instruments Incorporated

Figure 37. Simplified Functional Block Diagram for Dual Loop Mode

9.2.1 Design Requirements

Given a remote radio head (RRU) type application which needs to clock some ADCs, DACs, FPGA, SERDES, and an LO. The input clock will be a recovered clock which needs jitter cleaning. The FPGA clock should have a clock output on power up. A summary of clock input and output requirements are as follows:

Clock Input:

- 30.72 MHz recovered clock.

Clock Outputs:

- 2x 245.76 MHz clock for ADC, LVPECL
- 4x 983.04 MHz clock for DAC, LVPECL
- 1x 122.88 MHz clock for FPGA, LVPECL. POR clock
- 1x 122.88 MHz clock for SERDES, LVPECL
- 2x 122.88 MHz clock for LO, LVCMOS

It is also desirable to have the holdover feature engage if the recovered clock reference is ever lost. The following information reviews the steps to produce this design.

9.2.2 Detailed Design Procedure

Design of all aspects of the LMK04906 are quite involved and software has been written to assist in part selection, part programming, loop filter design, and simulation. This design procedure will give a quick outline of the process.

Note that this information is current as of the date of the release of this datasheet. Design tools receive continuous improvements to add features and improve model accuracy. Refer to software instructions or training for latest features.

Typical Application (continued)

1. Device Selection
   - the key to device selection is required VCO frequency given required output frequencies. The device must be able to produce the VCO frequency that can be divided down to required output frequencies.
   - The software design tools will take inot account VCO frequency range for specific devices based on the application's required output frequencies. Using an external VCO provides increased flexibility regarding valid designs.
   - To understand the process better, refer to *Frequency Planning With the LMK04906 Family* for more detail on calculating valid VCO frequency when using integer dividers using the least common multiple (LCM) of the output frequencies.
2. Device Configuration
   - There are many possible permutations of dividers and other registers to get same input and output frequencies from a device. However there are some optimizations and trade-offs to be considered.
     - If more than one divider is in series, for instance VCO divider to CLKout divider, or VCO divider to PLL prescaler to PLL N. It is possible although not assured that some crosstalk/mixing could be created when using some divides.
   - The design software normally attempts to maximize phase detector frequency, use smallest dividers, and maximizes PLL charge pump current.
   - When an external VCXO or crystal is used for jitter cleaning, the design software will choose the maximum frequency value, depending on design software options, this max frequency may be limited to standard value VCXOs/Crystals. **Note, depending on application, different frequency VCXOs** may be chosen to generate some of the required output frequencies.
   - Refer to *PLL Programming* for divider equations need to ensure PLL is locked. The design software is able to configure the device for most cases, **but at this time for advanced features like 0-delay, the user must take care to ensure proper PLL programming.**
   - These guidelines may be followed when configuring PLL related dividers or other related registers:
     - For lowest possible in-band PLL flat noise, maximize phase detector frequency to minimize N divide value.
     - For lowest possible in-band PLL flat noise, maximize charge pump current. The highest value charge pump currents often have similar performance due to diminishing returns.
     - To reduce loop filter component sizes, increase N value and/or reduce charge pump current.
     - Large capacitors help reduce phase detector spurs at phase detector frequency caused by external VCOs/VCXOs with low input impedance.
     - As rule of thumb, keeping the phase detector frequency approximately between 10 * PLL loop bandwidth and 100 * PLL loop bandwidth. A phase detector frequency less than 5 * PLL bandwidth may be unstable and a phase detector frequency > 100 * loop bandwidth may experience increased lock time due to cycle slipping.
3. PLL Loop Filter Design
   - It is recommended to use Clock Design Tool or Clock Architect to design your loop filter.
   - Best loop filter design and simulation can be achieved when:
     - Custom reference and VCXO phase noise profiles are loaded into the software.
     - VCO gain of the external VCXO or possible external VCO device are entered.
   - The Clock Design Tool will return solutions with high reference/phase detector frequencies by default. In the Clock Design Tool the user may increase the reference divider to reduce the frequency if desired. Due to the narrow loop bandwidth used on PLL1, it is common to lower the phase detector frequency on PLL1 to reduce component size.
   - While designing loop filter, adjusting the charge pump current or N value can help with loop filter component selection. Lower charge pump currents and larger N values result in smaller component values but may increase impacts of leakage and reduce PLL phase noise performance.
   - More detailed understanding of loop filter design can found in Dean Banerjee's *PLL Performance, Simulation, and Design* (www.ti.com/tool/pll_book).

Copyright © 2012–2017, Texas Instruments Incorporated

Typical Application (continued)

4. Clock Output Assignment
   - At this time the design software does not take into account frequency assignment to specific outputs except to ensure that the output frequencies can be achieved. It is best to consider proximity of each clock output to each other and other PLL circuitry when choosing final clock output locations. Here are some guidelines to help achieve best performance when assigning outputs to specific CLKout/OSCout pins.
     - Group common frequencies together.
     - PLL charge pump circuitry can cause crosstalk at charge pump frequency. Place outputs sharing charge pump frequency or lower priority outputs not sensitive to charge pump frequency spurs together.
     - Muxes can create a path for noise coupling. Consider all frequencies which may have some bleed through from non-selected mux inputs.
       - For example, LMK04906 CLKout6/7 and CLKout8/9 share a mux with OSCin.
   - Some clock targets require low close-in phase noise. If possible, use a VCXO based PLL1 output for such a clock target. An example is a clock to a PLL reference.
   - Some clock targets require excellent noise floor performance. Outputs driven by the internal VCO have the best noise floor performance. An example is an ADC or DAC.
5. Other device specific configuration. For LMK04906, consider the following:
   - PLL lock time based on programming:
     - In addition to the time it takes the device to lock to frequency, there is a digital filter to avoid false lock time detects which can also be used to ensure a specific PPM frequency accuracy. This also impacts the time it takes for the digital lock detect (DLD) pin to be asserted. Refer to *Digital Lock Detect Frequency Accuracy* for more information.
   - Holdover configuration:
     - Specific PPM frequency accuracy required to exit holdover can be programmed. Refer to *Holdover Mode - Automatic Exit of Holdover* for more information.
   - Digital delay: phase alignment of the output clocks.
   - Analog delay: another method to shift phases of clocks with finer resolution with the penalty of increase noise floor. Clock Design Tool can simulate analog delay impact on phase noise floor.
   - Dynamic digital delay: ability to shift phase alignment of clocks with minimum disruption during operation.
6. Device Programming
   - The software tool CodeLoader for EVM programming can be used to setup the device in the desired configuration, then export a hex register map suitable for use in application.

9.2.2.1 Device Selection

Use the WEBENCH Clock Architect Tool or Clock Design Tool. Enter the required frequencies and formats into the tool. To use this device, find a solution using the LMK04906.

9.2.2.1.1 Clock Architect

When viewing resulting solutions, it is possible to narrow the parts used in the solution by setting a filter.

Under advanced tab, filtering of specific parts can be done using regular expressions in the Part Filter box. "LMK04906" will filter for only the LMK04906 device (without quotes).

Copyright © 2012–2017, Texas Instruments Incorporated

Typical Application (continued)

9.2.2.1.2 Clock Design Tool

In wizard-mode, select Dual Loop PLL to find the LMK04906 device. If a high frequency and clean reference is available, Although dual loop mode is selected as a customer requirement, it is not required to use dual loop; PLL1 can be powered down and input is then provided via the OSCin port. When simulating single loop solutions, set PLL1 loop filter block to "0 Hz LBW" and use VCXO as the reference block.

9.2.2.1.3 Calculation Using LCM

In this example, the LCM(245.76 MHz, 983.04 MHz, 122.88 MHz) = 983.04 MHz. A valid VCO frequency for LMK04906 is 2949.12 MHz = 3 * 983.04 MHz. Therefore the LMK0480B may be used to produce these output frequencies.

9.2.2.2 Device Configuration

The tools automatically configure the simulation to meet the input and output frequency requirements given and make assumptions about other parameters to give some default simulations. The assumptions made are to maximize input frequencies, phase detector frequencies, and charge pump currents while minimizing VCO frequency and divider values.

For this example, when using the clock design tool, the reference would have been manually entered as 30.72 MHz according to input frequency requirements, but the tool allows VCXO1 frequency either to be set manually, auto-selected according to standard frequencies, or auto-selected for best frequency. With the best frequency option, the highest possible VCXO frequency which gives the highest possible PLL2 PDF frequency is recommended first. In this case: 421 + 53/175 MHz VCXO resulting in a 140 + 76/175 MHz phase detector frequency. This is a high phase detector frequency, but the VCXO is likely going to be a custom order. The select configuration page just before simulation shows before some different configurations possible with different VCO divider values. For example, a more common 491.52 MHz frequency provides a 122.88 MHz PDF. This is a more logical configuration.

From the simulation page of clock design tool, it can be seen that the VCXO frequency of 491.52 MHz is too high for feedback into the PLL1_N divider. Reducing the VCXO frequency to 245.76 MHz resolves the PLL1_N divider max input frequency problem. The PLL2 R divider must be updated to 2 so that the VCO of PLL2 is still at 2949.12 MHz.

At this point the design meets all input and output frequency requirements and it is possible to design a loop filter for system and simulate performance on CLKouts. However, consider also the following:

- At this time the clock design tool doesn't assign outputs strategically for jitter, such as PLL1 vs PLL2. If PLL1 output frequency is high enough, it may have improved jitter performance depending on the noise floor and application required integration range.
- The clock design tool does not consider power on reset clocks in the clock requirements or assignments.
- The clock design tool simplifies the LMK04906 architecture not showing the mux complexity around OSCout0/1 and not showing OSCout1. Simulation of OSCout0 is equivalent to OSCout1.

The next section addresses how the user may alter the design when considering these items.

9.2.2.2.1 PLL LO Reference

PLL1 outputs have the best phase noise performance for LO references. As such OSCout0 can be used to provide the 122.88 MHz LO reference clock. To achieve this with the 245.76 MHz VCXO the OSCout_DIV can be set to 2 to provide 122.88 MHz at OSCout0. However in the next section it is determined that for the POR clock, a 122.88 MHz VCXO will be chosen which results not needing to change this parameter.

Copyright © 2012–2017, Texas Instruments Incorporated

Typical Application (continued)

9.2.2.2.2 POR Clock

If OSCout1 is to be used for LVPECL POR 122.88 MHz clock, the POR value of the OSCout_DIV is 1, so a 122.88 MHz VCXO frequency must be chosen. This may be desired anyway since the phase detector frequency is limited to 122.88 MHz and lower frequency VCXOs tend to cost less. With this change the OSCin frequency and phase detector frequency are the same, so the doubler must be enabled and the PLL2 R divider programmed = 2 to follow the rule stated in *PLL Programming*. Since the clock design tool does not show the doubler, PLL2_R will still reflect the value 1 one for the simulation purposes.

If LVDS was required for POR clock, a voltage divider could be used to convert from LVPECL to LVDS.

Note: it is possible to set the PLL2 R = 0.5 to simulate the doubler in-case lower frequency VCXOs would like to be simulated. For example a 61.44 MHz VCXO could be used while retaining a 122.88 MHz phase detector frequency. However, it would reduce the LO reference frequency and POR clock frequency to 61.44 MHz.

At this time the main design updates have been made to support the POR clock and loop filter design may begin.

9.2.2.3 PLL Loop Filter Design

The PLL structure for the LMK04906 is illustrated in Figure 37.

At this time the user may choose to make adjustments to the simulation tools for more accurate simulations to their application. For example:

- Clock Design Tool allows loading a custom phase noise plot for any block. Typically, a custom phase noise plot is entered for CLKin to match the reference phase noise to the device; a phase noise plot for the VCXO can additionally be provided to match the performance of VCXO used. For improved accuracy in simulation and optimum loop filter design, be sure to load these custom noise profiles for use in application. After loading a phase noise plot, user should recalculate the recommended loop filter design.
- The Clock Design Tool will return solutions with high reference/phase detector frequencies by default. In the Clock Design Tool the user may increase the reference divider to reduce the frequency if desired. Due to the narrow loop bandwidth used on PLL1, it is common to reduce the phase detector frequency on PLL1 by increasing PLL1 R.

For this example, for PLL1 to perform jitter cleaning and to minimize jitter from PLL2 used for frequency multiplication:

- PLL1: A narrow loop bandwidth PLL1 filter was design by updating the loop bandwidth to 50 Hz and phase margin to 50 degrees.
- PLL2:
  - VCXO noise profile is measured, then loaded into VCXO block in clock design tool.
  - The recommended loop filter is redesigned. Updates to the PLL1 loop filter and VCXO phase noise may change the loop filter recommendation.

The next two sections will discuss PLL1 and PLL2 loop filter design specific to this example using default phase noise profiles.

NOTE

Clock Design Tool provides some recommend loop filters upon first load of the simulation. Anytime PLL related inputs change like an input phase noise, charge pump current, divider values, and so forth. it is best to re-design the PLL1 loop filter to the recommended design or your desired parameters. After PLL1, then update the PLL2 loop filter in the same way to keep the loop filters designed and optimized for the application. Since PLL1 loop filter design may impact PLL2 loop filter design, be sure to update the designs in order.

Copyright © 2012–2017, Texas Instruments Incorporated

Typical Application (continued)

9.2.2.3.1 PLL1 Loop Filter Design

For this example, in the clock design tool simulator click on the PLL1 loop filter design button, then update the loop bandwidth for 0.05 kHz and the phase margin for 50 degrees and press calculate. With the 30.72 MHz phase detector frequency and 1.6 mA charge pump; the designed loop filter's largest capacitor, C2, is 27 µF. Supposing a goal of < 10 µF; setting PLL1 R = 4 and pressing the calculate again shows that C2 is 6.8 µF. Suppose that a reduction to < 1 µF is desired, continuing to increase the PLL1 R to 8 resulting in a phase detector frequency of 3.84 MHz and reducing the charge pump current from 1.6 mA to 0.4 mA and calculating again shows that C2 is 820 nF. As N was increased and charge pump decreased, this final design has R2 = 12 kΩ. The first design with low N value and high charge pump current result in R2 = 390 Ω. The impact of the thermal resistance is calculated in the tool. Viewing the simulation of the loop filter with the 12-kΩ resistor shows that the thermal noise in the loop is not impacting performance.

It may be desired to design a 3rd order loop filter for additional attenuation input noise and spurs

With the PLL1 loop filter design complete, PLL2's loop filter is ready to be designed.

9.2.2.3.2 PLL2 Loop Filter Design

In the clock design tool simulator, click on the PLL2 loop filter design button, then press recommend design. For PLL2's loop filter maximum phase detector frequency and maximum charge pump current are typically used. Typically the jitter integration bandwidth includes the loop filter bandwidth for PLL2. The recommended loop filter by the tools are designed to minimize jitter. The integrated loop filter components are minimized with this recommendation as to allow maximum flexibility in achieve wide loop bandwidths for low PLL noise. With the recommended loop filter calculated, this loop filter is ready to be simulated.

If using integrated components is desired, open the bode plot for the PLL2 Loop Filter, then make adjustments to the integrated components. The effective loop bandwidth and phase margin with these updates is calculated. The integrated loop filter components are good to use when attempting to eliminate some spurs since they provide filtering after the bond wires. The recommended procedure is to increase C3/C4 capacitance, then R3/R4 resistance. Large R3/R4 resistance can result in degraded VCO phase noise performance.

9.2.2.4 Clock Output Assignment

At this time the Clock Design Tool and Clock Architect only assign outputs to specific clock outputs numerically; not necessarily by optimum configuration. The user may wish to make some educated re-assignment of outputs.

During device configuration, some output assignment was discussed since it impacted the part's configuration relating to loop filter design, such as:

- In this example, OSCout1 can be used to provide the power on reset (POR) start-up clock to the FPGA at 122.88 MHz since the VCXO frequency is the required output frequency.
- Since PLL1 outputs have best in-band noise, OSCout0 is used to provide LVCMOS output to the PLL reference for the LO. LVCMOS (Norm/Inv) is used instead of LVCMOS (Norm/Norm) to reduce crosstalk. It is also possible to use CLKout6/7 or CLKout8/9 for a PLL reference being driven from the VCXO. The noise floor will be higher, but close-in noise is typically of more concern since noise above the loop bandwidth of the LO will be dominated by the VCO of the LO. See Figure 38.

Since CLKout6/7 and CLKout8/9 have a mux allowing them to be driven by the VCXO and due there is a chance for some 122.88 MHz crosstalk from the VCXO. The 122.88 MHz SERDES clock will be placed on CLKout6 since it will not be sensitive to crosstalk as it is operating at the same frequency.

The two 245.76 MHz clocks and four 983.04 MHz clocks for the converters need to be discussed. There is some flexibility in assignment. For example CLKout0/1 could operate at 245.76 MHz for the ADCs and then CLKout2/3 and CLKout4/5 could operate at 983.04 MHz for the DAC. It is also possible to consider CLKout2/3 for the ADC and position CLKout0/1 and CLKout10/11 for the DAC. The ADCs clock was placed as far as possible from other clock which could result in sub-harmonic spurs since the ADC clock is often the most sensitive.

Copyright © 2012–2017, Texas Instruments Incorporated

Typical Application (continued)

9.2.2.5 Other Device Specific Configuration

9.2.2.5.1 Digital Lock Detect

Digital lock time for PLL1 will ultimately depend upon the programming of the PLL1_DLD_CNT register as discussed in *Digital Lock Detect Frequency Accuracy*. Since the PLL1 phase detector frequency in this example is 3.84 MHz, the lock time will = 1 / (PLL1_DLD_CNT * 3.84 MHz)

Digital lock time for PLL1 if PLL1_DLD_CNT = 10000 is just over 2.6 ms. When using holdover, it is very important to program the PLL1_DLD_CNT to a value large enough to prevent false digital lock detect signals.

If PLL1_DLD_CNT is too small, when the device exits holdover and is re-locking, the DLD will go high while the phase of the reference and feedback are within the specified window size because the programmed PLL1_DLD_CNT will be satisfied. However, if the loop has not yet settled to without the window size, when the phases of the reference and feedback once again exceed the window size, the DLD will return low. Provided that DISABLE_DLD1_DET = 0, the device once again enter holdover. Assuming that the reference clock is valid because holdover was just exited, the exit criteria will again be met, holdover will exit, and PLL1 will start locking. Unfortunately, the same sequence of events will repeat resulting in oscillation out-of and back-into holdover. Setting the PLL1_DLD_CNT to an appropriately large value prevents chattering of the PLL1 DLD signal and stable holdover operation can be achieved.

Refer to *Holdover Mode - Automatic Exit of Holdover* for more detail on calculating exit times and how the PLL1_DLD_CNT and PLL1_WND_SIZE work together.

9.2.2.5.2 Holdover

For this example, when the recovered clock is lost, the goal is to set the VCXO to Vcc/2 until the recovered clock returns. *Holdover Mode* contains detailed information on how to program holdover.

To achieve the above goal, fixed holdover will be used. Program:

- HOLDOVER_MODE = 2 (Holdover enabled)
- EN_TRACK = 0 (Tracking disabled)
- EN_MAN_DAC = 1 (Use manual DAC for holdover voltage value)
- MAN_DAC = 512 (Approximately Vcc/2)
- DISABLE_DLD1_DET = 0 (Use PLL1 DLD = Low to start holdover)

9.2.2.6 Device Programming

The CodeLoader software is used to program the LMK04906 evaluation board using the LMK04906 profile. It also allows the exporting of a register map which can be used to program the device to the user's desired configuration.

Once a configuration of dividers has been achieved using the Clock Design Tool to meet the requested input/output frequencies with the desired performance, the CodeLoader software is manually updated with this information to meet the required application. At this time no automatic import exists.

Copyright © 2012–2017, Texas Instruments Incorporated

Typical Application (continued)

9.2.3 Application Curve

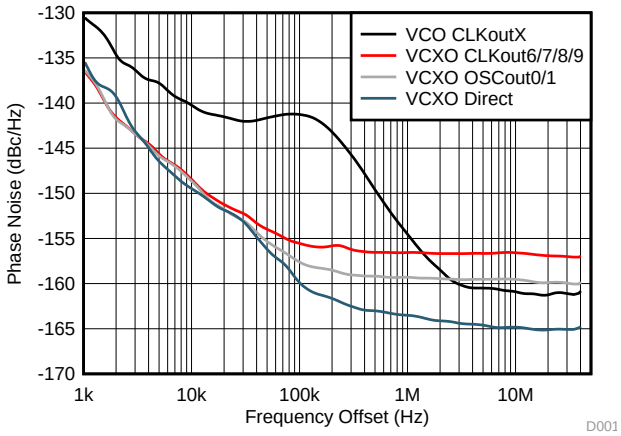

Figure 38. LVPECL Phase Noise, 122.88 MHz
Illustration of Different Performance Depending on Signal Path.

9.3 System Examples

9.3.1 System Level Diagram

Figure 39 and Figure 40 show an LMK04906 family device with external circuitry for clocking and for power supply to serve as a guideline for good practices when designing with the LMK04906 family. See *Pin Connection Recommendations* for more details on the pin connections and bypassing recommendations. Also refer to the evaluation board. PCB design will also play a role in device performance.

Copyright © 2012–2017, Texas Instruments Incorporated

System Examples (continued)

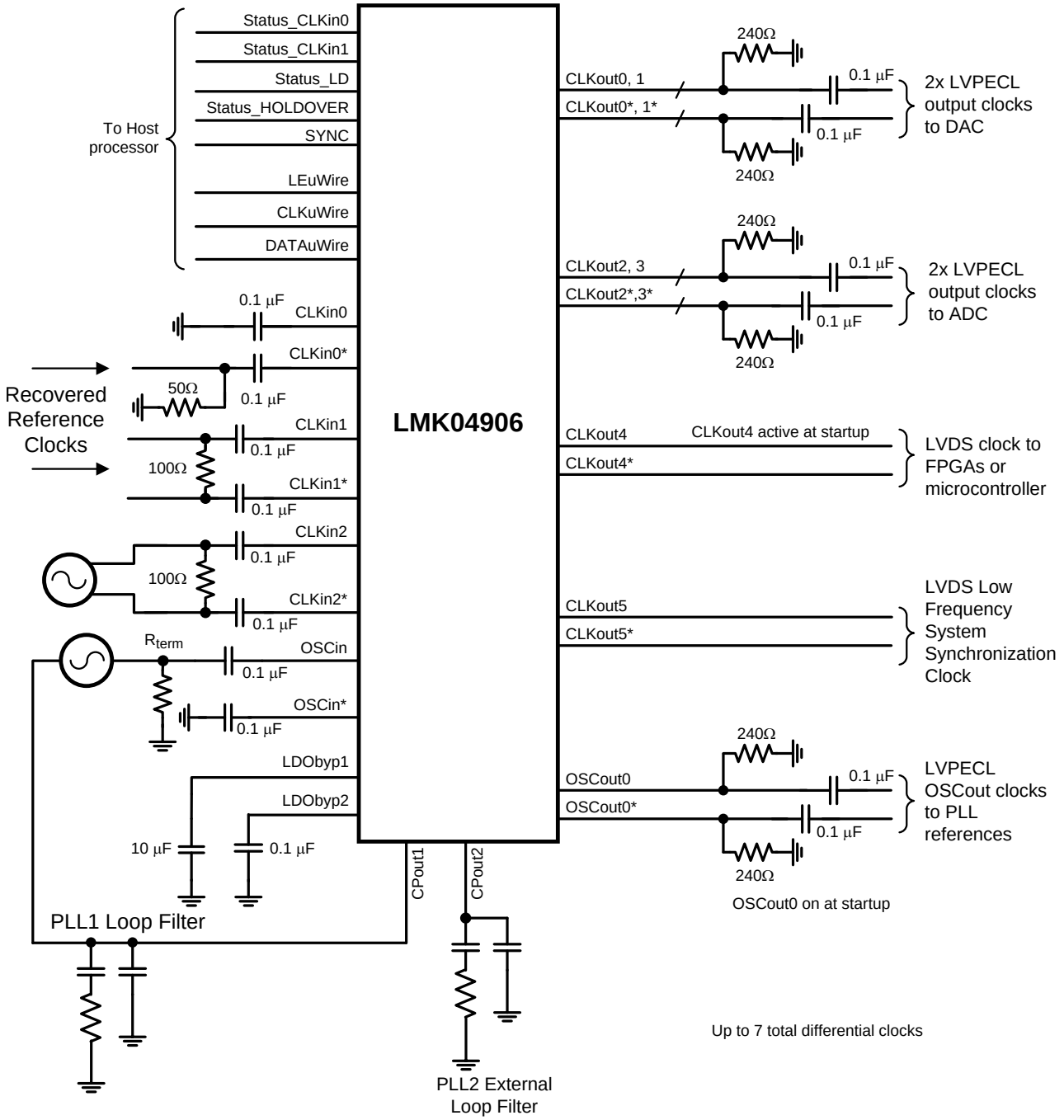

Figure 39. Example Application – System Schematic Except for Power

Figure 39 shows the primary reference clock input is at CLKin0/0*. A secondary reference clock is driving CLKin1/1*. Both clocks are depicted as AC coupled differential drivers. The VCXO attached to the OSCin/OSCin* port is configured as an AC coupled single-ended driver. Any of the input ports (CLKin0/0*, CLKin1/1*, CLKin2/2*or OSCin/OSCin*) may be configured as either differential or single-ended. These options are discussed later in the data sheet.

See *Loop Filter* for more information on PLL1 and PLL2 loop filters.

System Examples (continued)

The clock outputs are all AC coupled with 0.1 µF capacitors. Some clock outputs are depicted as LVPECL with 240 Ω emitter resistors and some clock outputs as LVDS. However, the output format of the clock outputs will vary by user programming, so the user should use the appropriate source termination for each clock output. Later sections of this data sheet illustrate alternative methods for AC coupling, DC coupling and terminating the clock outputs.

PCB design will influence crosstalk performance. Tightly coupled clock traces will have less crosstalk than loosely coupled clock traces. Also proximity to other clocks traces will influence crosstalk.

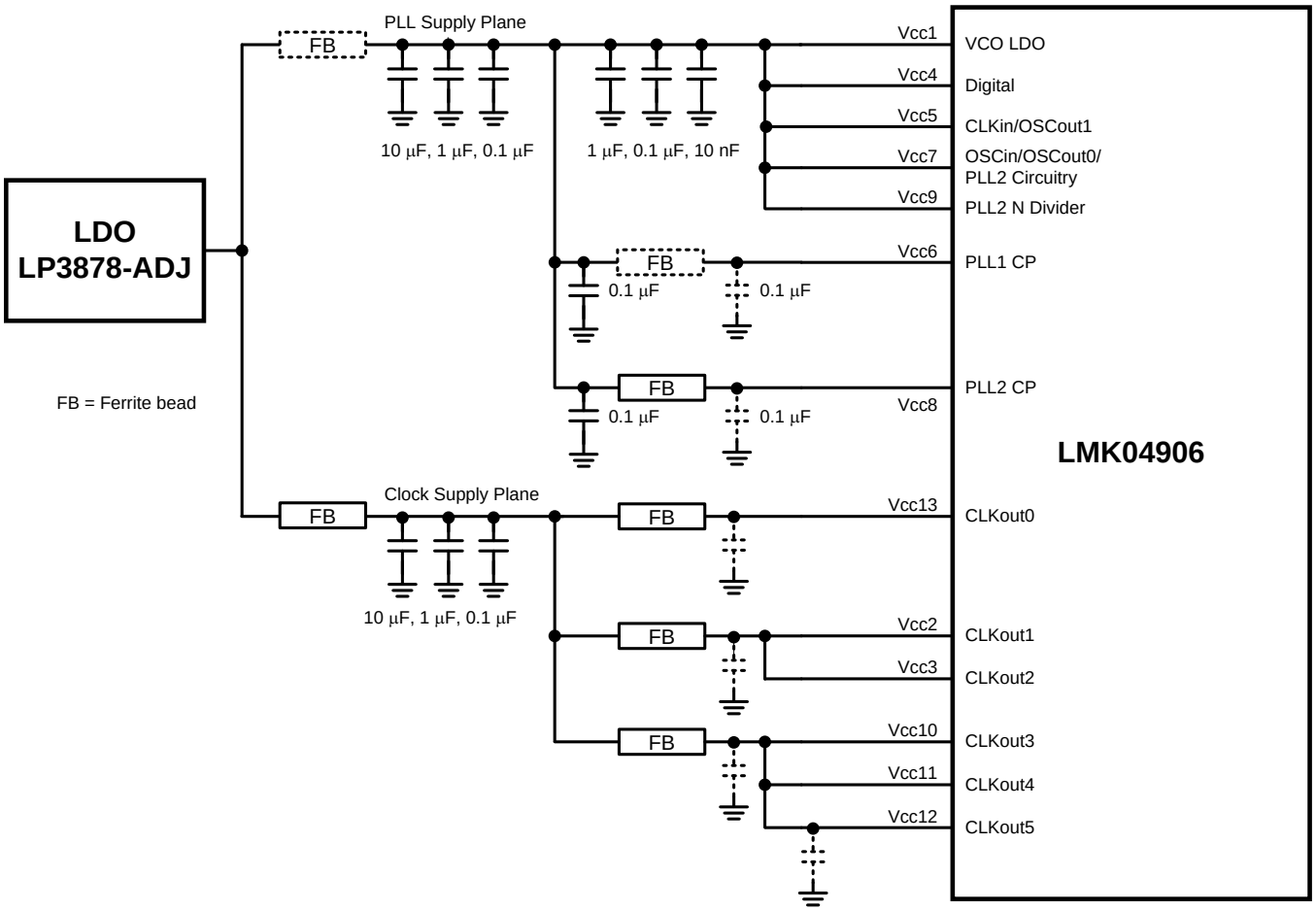

Figure 40. Example Application – Power System Schematic

Figure 40 shows an example decouping and bypassing scheme for the LMK04906. Components drawn in dotted lines are optional. Two power planes are used in this design, one for the clock outputs and one for other PLL circuits.

PCB design will influence impedance to the supply. Vias and traces will increase the impedance to the power supply. Ensure good direct return current paths.

Copyright © 2012–2017, Texas Instruments Incorporated

9.4 Do's and Don'ts

9.4.1 LVCMOS Complementary vs. Non-Complementary Operation

- It is recommended to use a complementary LVCMOS output format such as LVCMOS (Norm/Inv) to reduce switching noise and crosstalk when using LVCMOS.
- If only a single LVCMOS output is required, the complementary LVCMOS output format can still be used by leaving the unused LVCMOS output floating.
- A non-complimentary format such as LVCMOS (Norm/Norm) is not recommended as increased switching noise is present.

9.4.2 LVPECL Outputs

When using an LVPECL output it is not recommended to place a capacitor to ground on the output as might be done when using a capacitor input LC lowpass filter. The capacitor will appear as a short to the LVPECL output drivers which are able to supply large amounts of switching current. The effect of the LVPECL sourcing large switching currents can result in:

1. Large switching currents through the Vcc pin of the LVPECL power supply resulting in more Vcc noise and possible Vcc spikes.
2. Large switching currents injected into the ground plane through the capacitor which could couple onto other Vcc pins with bypass capacitors to ground resulting in more Vcc noise and possible Vcc spikes.

Copyright © 2012–2017, Texas Instruments Incorporated

10 Power Supply Recommendations

10.1 Pin Connection Recommendations

10.1.1 Vcc Pins and Decoupling

All Vcc pins must always be connected.

Integrated capacitance on the LMK04906 makes external high frequency decoupling capacitors (≤ 1 nF) unnecessary. The internal capacitance is more effective at filtering high frequency noise than off device bypass capacitance because there is no bond wire inductance between the LMK04906 circuit and the bypass capacitor.

10.1.1.1 Vcc2, Vcc3, Vcc10, Vcc11, Vcc12, Vcc13 (CLKout Vccs)

Each of these pins has an internal 200 pF of capacitance.

Ferrite beads may be used to reduce crosstalk between different clock output frequencies on the same LMK04906 device. Ferrite beads placed between the power supply and a clock Vcc pin will reduce noise between the Vcc pin and the power supply. When several output clocks share the same frequency a single ferrite bead can be used between the power supply and each same frequency CLKout Vcc pin.

When using ferrite beads on CLKout Vcc pins, care must be taken to ensure the power supply can source the needed switching current.

- In most cases a ferrite bead may be placed and the internal capacitance is sufficient.
- If a ferrite bead is used with a low frequency output (typically ≤ 10 MHz) and a high current switching clock output format such as non-complementary LVCMOS or high swing LVPECL is used, then...
  - the ferrite bead can be removed to the lower impedance to the main power supply and bypass capacitors, or
  - localized capacitance can be placed between the ferrite bead and Vcc pin to support the switching current.
    - Note that decoupling capacitors used between the ferrite bead and a CLKout Vcc pin can permit high frequency switching noise to couple through the capacitors into the ground plane and onto other CLKout Vcc pins with decoupling capacitors. This can degrade crosstalk performance.

10.1.1.2 Vcc1 (VCO), Vcc4 (Digital), and Vcc9 (PLL2)

Each of these pins has internal bypass capacitance.

Ferrite beads should not be used between these pins and the power supply/large bypass capacitors because these Vcc pins don't produce much noise or a ferrite bead can cause phase noise disturbances and resonances.

The typical application diagram in Figure 40 shows all these Vccs connected to together to Vcc without a ferrite bead.

10.1.1.3 Vcc6 (PLL1 Charge Pump) and Vcc8 (PLL2 Charge Pump)

Each of these pins has an internal bypass capacitor.

Use of a ferrite bead between the power supply/large bypass capacitors and PLL1 is optional. PLL1 charge pump can be connected directly to Vcc along with Vcc1, Vcc4, and Vcc9. Depending on the application, a 0.1 uF capacitor may be placed close to PLL1 charge pump Vcc pin.

A ferrite bead should be placed between the power supply/large bypass capacitors and Vcc8. Most applications have high PLL2 phase detector frequencies and (> 50 MHz) such that the internal bypassing is sufficient and a ferrite bead can be used to isolate this switching noise from other circuits. For lower phase detector frequencies a ferrite bead is optional and depending on application a 0.1 uF capacitor may be added on Vcc8.

10.1.1.4 Vcc5 (CLKin), Vcc7 (OSCin & OSCout0)

Each of these pins has an internal 100 pF of capacitance. No ferrite bead should be placed between the power supply/large bypass capacitors and Vcc5 or Vcc7.

These pins are unique since they supply an output clock and other circuitry.

Vcc5 supplies CLKin.

Copyright © 2012–2017, Texas Instruments Incorporated

Pin Connection Recommendations (continued)

Vcc7 supplies OSCin, OSCout0, and PLL2 circuitry.

10.1.2 Unused Clock Outputs

Leave unused clock outputs floating and powered down.

10.1.3 Unused Clock Inputs

Unused clock inputs can be left floating.

10.1.4 LDO Bypass

The LDObyp1 and LDObyp2 pins should be connected to GND through external capacitors, as shown in the diagram.

10.2 Current Consumption and Power Dissipation Calculations

From Table 118 the current consumption can be calculated for any configuration.

For example, the current for the entire device with 1 LVDS (CLKout0) and 1 LVPECL 1.6 Vpp /w 240 ohm emitter resistors (CLKout1) output active with a clock output divide = 1, and no other features enabled can be calculated by adding up the following blocks: core current, clock buffer, one LVDS output buffer current, and one LVPECL output buffer current. There will also be one LVPECL output drawing emitter current, which means some of the power from the current draw of the device is dissipated in the external emitter resistors which doesn't add to the power dissipation budget for the device but is important for LDO I_{CC} calculations.

For total current consumption of the device, add up the significant functional blocks. In this example, 228.1 mA =

- 140 mA (core current)
- 17.3 mA (base clock distribution)
- 25.5 mA (CLKout0 & 1 divider)
- 14.3 mA (LVDS buffer)
- 31 mA (LVPECL 1.6 Vpp buffer /w 240 ohm emitter resistors)

Once total current consumption has been calculated, power dissipated by the device can be calculated. The power dissipation of the device is equation to the total current entering the device multiplied by the voltage at the device minus the power dissipated in any emitter resistors connected to any of the LVPECL outputs. If no emitter resistors are connected to the LVPECL outputs, this power will be 0 watts. Continuing the above example which has 228.1 mA total Icc and one output with 240 ohm emitter resitors. Total IC power = 717.7 mW = 3.3 V * 228.1 mA - 35 mW.

Copyright © 2012–2017, Texas Instruments Incorporated

Current Consumption and Power Dissipation Calculations (continued)

Table 118. Typical Current Consumption for Selected Functional Blocks (T_A = 25 °C, V_{CC} = 3.3 V)

BLOCK	CONDITION		TYPICAL I_{CC} (mA)	POWER DISSIPATED IN DEVICE (mW)	POWER DISSIPATED EXTERNALLY(1) (mW)
CORE AND FUNCTIONAL BLOCKS					
Core	MODE = 0: Dual Loop, Internal VCO	PLL1 and PLL2 locked	140	462	—
	MODE = 2: Dual Loop, Internal VCO, 0-Delay	PLL1 and PLL2 locked; Includes EN_FEEDBACK_MUX = 1	155	512	—
	MODE = 3: Dual Loop, External VCO	PLL1 and PLL2 locked	127	419	—
	MODE = 5: Dual Loop, External VCO, 0-Delay	PLL1 and PLL2 locked; Includes EN_FEEDBACK_MUX = 1	142	469	—
	MODE = 6: Single Loop (PLL2), Internal VCO	PLL2 locked	116	383	—
	MODE = 11: Single Loop (PLL2), External VCO	PLL2 locked	103	340	—
	MODE = 16: Clock Distribution	PD_OSCin = 0	42	139	—
		PD_OSCin = 1	34.5	114	—
EN_TRACK	Tracking is enabled (EN_TRACK = 1)		2	6.6	—
Base Clock Distribution	At least 1 CLKoutX_PD = 0		17.3	57.1	—
CLKout Outputs	Each CLKout Output		2.8	9.2	—
Clock Divider/ Digital Delay	When a clock output is enabled, this contributes the divider/delay block		25.5	84.1	—
	Divider / digital delay in **extended** mode		29.6	97.7	—
VCO Divider	VCO Divider current		7.7	25.4	—
HOLDOVER mode	When in holdover mode		2.2	7.2	—
Feedback Mux	Feedback mux must be enabled for 0-delay modes and digital delay mode (SYNC_QUAL = 1)		4.9	16.1	—
SYNC Asserted	While SYNC is asserted, this extra current is drawn		1.7	5.6	—
EN_SYNC = 1	Required for SYNC functionality. May be turned off once SYNC is complete to save power.		6	19.8	—
SYNC_QUAL = 1	Delay enabled, delay > 7 (CLKout_MUX = 2, 3)		8.7	28.7	—
Crystal Mode	Enabling the Crystal Oscillator	XTAL_LVL = 0	1.8	5.9	—
		XTAL_LVL = 1	2.7	9	—
		XTAL_LVL = 2	3.6	12	—
		XTAL_LVL = 3	4.5	15	—
OSCin Doubler	EN_PLL2_REF_2X = 1		2.8	9.2	—
Analog Delay	Analog Delay Value	CLKoutX_ANLG_DLY = 0 to 3	3.4	11.2	—
		CLKoutX_ANLG_DLY = 4 to 7	3.8	12.5	—
		CLKoutX_ANLG_DLY = 8 to 11	4.2	13.9	—
		CLKoutX_ANLG_DLY = 12 to 15	4.7	15.5	—
		CLKoutX_ANLG_DLY = 16 to 23	5.2	17.2	—
	Clock Output Has Analog Delay Selected. Example: CLKout0_ADLY_SEL = 1		2.8	9.2	—

(1) Power is dissipated externally in LVPECL emitter resistors. The externally dissipated power is calculated as twice the DC voltage level of one LVPECL clock output pin squared over the emitter resistance. That is to say power dissipated in emitter resistors = 2 * Vem^2 / Rem.

Copyright © 2012–2017, Texas Instruments Incorporated

Current Consumption and Power Dissipation Calculations (continued)

Table 118. Typical Current Consumption for Selected Functional Blocks (T_A = 25 °C, V_{CC} = 3.3 V) (continued)

BLOCK	CONDITION		TYPICAL I_{CC} (mA)	POWER DISSIPATED IN DEVICE (mW)	POWER DISSIPATED EXTERNALLY [1] (mW)
CLOCK OUTPUT BUFFERS					
LVDS	100-Ω differential termination		14.3	47.2	—
LVPECL	LVPECL 2.0 Vpp, AC coupled using 240-Ω emitter resistors		32	70.6	35
	LVPECL 1.6 Vpp, AC coupled using 240-Ω emitter resistors		31	67.3	35
	LVPECL 1.6 Vpp, AC coupled using 120-Ω emitter resistors		46	91.8	60
	LVPECL 1.2 Vpp, AC coupled using 240-Ω emitter resistors		30	59	40
	LVPECL 0.7 Vpp, AC coupled using 240-Ω emitter resistors		29	55.7	40
LVCMOS	LVCMOS Pair (CLKoutX_TYPE = 6 to 9) C_L = 5 pF	3 MHz	24	79.2	—
		30 MHz	26.5	87.5	—
		150 MHz	36.5	120.5	—
	LVCMOS Single (CLKoutX_TYPE = 10 to 13) C_L = 5 pF	3 MHz	15	49.5	—
		30 MHz	16	52.8	—
		150 MHz	21.5	71	—

11 Layout

11.1 Layout Guidelines

Power consumption of the LMK04906 can be high enough to require attention to thermal management. For reliability and performance reasons the die temperature should be limited to a maximum of 125°C. That is, as an estimate, T_A (ambient temperature) plus device power consumption times θ_{JA} should not exceed 125°C.

The package of the device has an exposed pad that provides the primary heat removal path as well as excellent electrical grounding to a printed circuit board. To maximize the removal of heat from the package a thermal land pattern including multiple vias to a ground plane must be incorporated on the PCB within the footprint of the package. The exposed pad must be soldered down to ensure adequate heat conduction out of the package.

A recommended land and via pattern is shown in Figure 41. More information on soldering WQFN packages can be obtained: http://www.ti.com/packaging.

To minimize junction temperature it is recommended that a simple heat sink be built into the PCB (if the ground plane layer is not exposed). This is done by including a copper area of about 2 square inches on the opposite side of the PCB from the device. This copper area may be plated or solder coated to prevent corrosion but should not have conformal coating (if possible), which could provide thermal insulation. The vias shown in Figure 41 should connect these top and bottom copper layers and to the ground layer. These vias act as “heat pipes” to carry the thermal energy away from the device side of the board to where it can be more effectively dissipated.

Copyright © 2012–2017, Texas Instruments Incorporated

Layout Guidelines (continued)

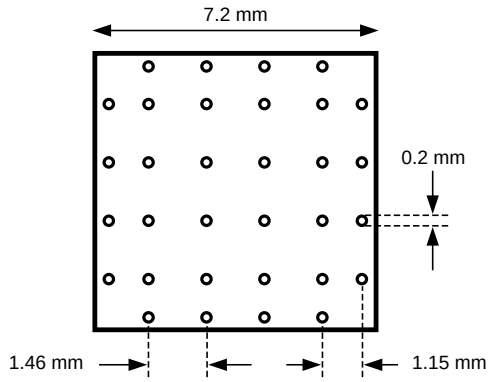

Figure 41. Recommended Land and Via Pattern

Copyright © 2012–2017, Texas Instruments Incorporated

11.2 Layout Example

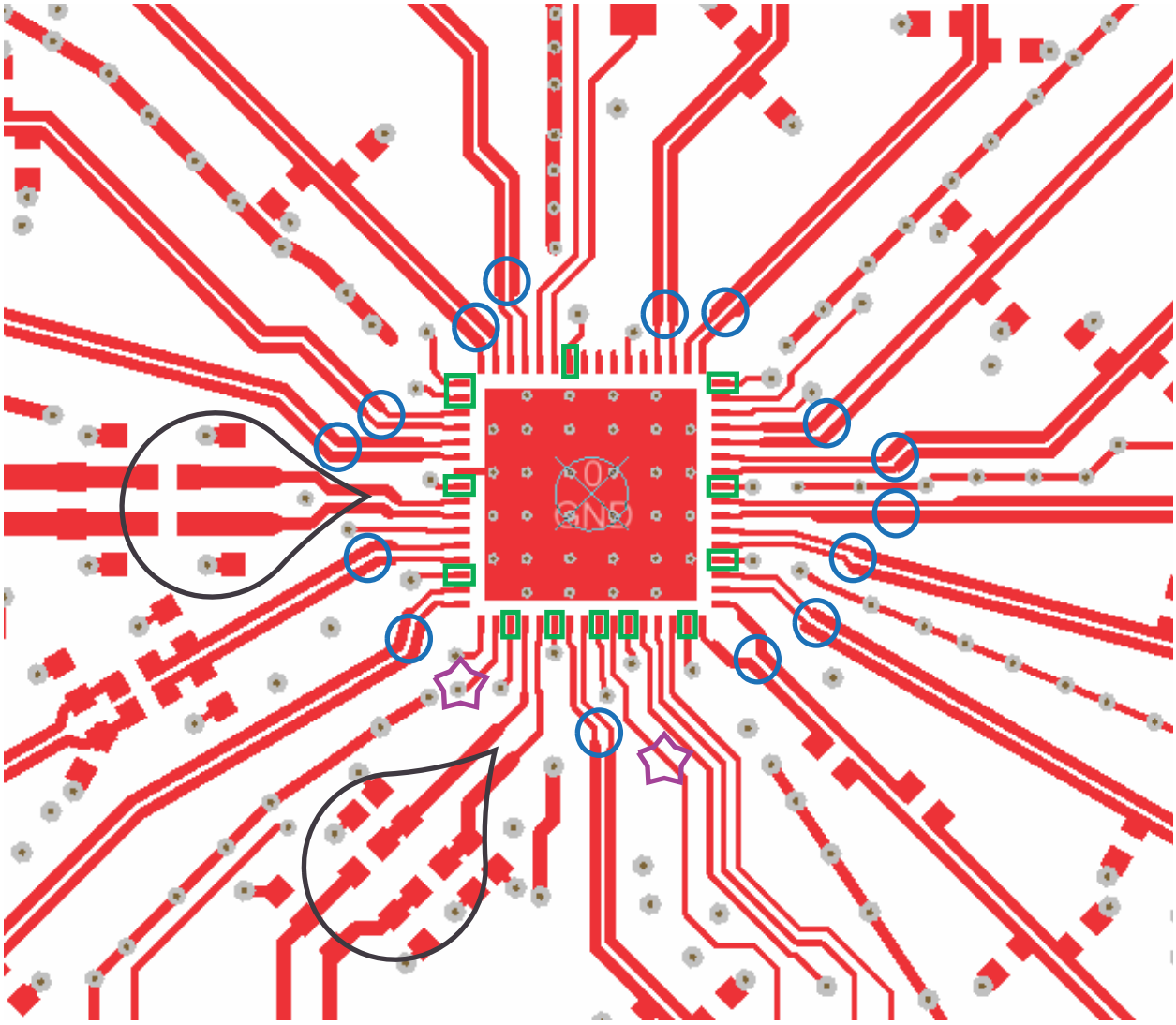

CLKin and OSCin path – if differential input (preferred) route trace tightly coupled like clock outputs. If single ended, have at least 3 trace width (of CLKin/OSCin trace) separation from other RF traces. Example shown is hybrid for both differential and single ended – not tightly couple to compromise for both configurations. RF Terminations should be placed as close to IC as possible. When using CLKin1 for high frequency input for external VCO or distribution, a 3 dB pi pad is suggested for termination.

For CLKout Vcc's place ferrite beads on top layer close to pins to choke high frequency noise from via.

Charge pump output – shorter traces are better. Place all resistors and caps closer to IC except for a single capacitor next to VCXO. In a 2nd order filter place C1 close to VCXO Vtune pin. In a 3rd and 4th order filter place C3 or C4 respectively close to VCXO.

Clock outputs – differential signals, should be routed tightly coupled to minimize PCB crosstalk. Trace impedance and terminations should be designed according to output type being used (i.e. LVDS, LVPECL...)

Figure 42. LMK04906 Layout Example

Copyright © 2012–2017, Texas Instruments Incorporated

12 Device and Documentation Support

12.1 Device Support

- Clock Design Tool
- Clock Architect
- Packaging Information
- Clock and Timing

12.2 Receiving Notification of Documentation Updates

To receive notification of documentation updates, navigate to the device product folder on ti.com. In the upper right corner, click on *Alert me* to register and receive a weekly digest of any product information that has changed. For change details, review the revision history included in any revised document.

12.3 Community Resource

The following links connect to TI community resources. Linked contents are provided "AS IS" by the respective contributors. They do not constitute TI specifications and do not necessarily reflect TI's views; see TI's Terms of Use.

TI E2E™ Online Community ***TI's Engineer-to-Engineer (E2E) Community.*** Created to foster collaboration among engineers. At e2e.ti.com, you can ask questions, share knowledge, explore ideas and help solve problems with fellow engineers.

Design Support ***TI's Design Support*** Quickly find helpful E2E forums along with design support tools and contact information for technical support.

12.4 Trademarks

PLLatinum, E2E are trademarks of Texas Instruments.
All other trademarks are the property of their respective owners.

12.5 Electrostatic Discharge Caution

These devices have limited built-in ESD protection. The leads should be shorted together or the device placed in conductive foam during storage or handling to prevent electrostatic damage to the MOS gates.

12.6 Glossary

SLYZ022 — *TI Glossary*.

This glossary lists and explains terms, acronyms, and definitions.

13 Mechanical, Packaging, and Orderable Information

The following pages include mechanical, packaging, and orderable information. This information is the most current data available for the designated devices. This data is subject to change without notice and revision of this document. For browser-based versions of this data sheet, refer to the left-hand navigation.

Copyright © 2012–2017, Texas Instruments Incorporated

PACKAGING INFORMATION

Orderable Device	Status (1)	Package Type	Package Drawing	Pins	Package Qty	Eco Plan (2)	Lead/Ball Finish (6)	MSL Peak Temp (3)	Op Temp (°C)	Device Marking (4/5)	Samples
LMK04906BISQ/NOPB	ACTIVE	WQFN	NKD	64	1000	Green (RoHS & no Sb/Br)	CU SN	Level-3-260C-168 HR	-40 to 85	K04906BISQ	Samples
LMK04906BISQE/NOPB	ACTIVE	WQFN	NKD	64	250	Green (RoHS & no Sb/Br)	CU SN	Level-3-260C-168 HR	-40 to 85	K04906BISQ	Samples
LMK04906BISQX/NOPB	ACTIVE	WQFN	NKD	64	2000	Green (RoHS & no Sb/Br)	CU SN	Level-3-260C-168 HR	-40 to 85	K04906BISQ	Samples

(1) The marketing status values are defined as follows:
ACTIVE: Product device recommended for new designs.
LIFEBUY: TI has announced that the device will be discontinued, and a lifetime-buy period is in effect.
NRND: Not recommended for new designs. Device is in production to support existing customers, but TI does not recommend using this part in a new design.
PREVIEW: Device has been announced but is not in production. Samples may or may not be available.
OBSOLETE: TI has discontinued the production of the device.

(2) Eco Plan - The planned eco-friendly classification: Pb-Free (RoHS), Pb-Free (RoHS Exempt), or Green (RoHS & no Sb/Br) - please check http://www.ti.com/productcontent for the latest availability information and additional product content details.
TBD: The Pb-Free/Green conversion plan has not been defined.
Pb-Free (RoHS): TI's terms "Lead-Free" or "Pb-Free" mean semiconductor products that are compatible with the current RoHS requirements for all 6 substances, including the requirement that lead not exceed 0.1% by weight in homogeneous materials. Where designed to be soldered at high temperatures, TI Pb-Free products are suitable for use in specified lead-free processes.
Pb-Free (RoHS Exempt): This component has a RoHS exemption for either 1) lead-based flip-chip solder bumps used between the die and package, or 2) lead-based die adhesive used between the die and leadframe. The component is otherwise considered Pb-Free (RoHS compatible) as defined above.
Green (RoHS & no Sb/Br): TI defines "Green" to mean Pb-Free (RoHS compatible), and free of Bromine (Br) and Antimony (Sb) based flame retardants (Br or Sb do not exceed 0.1% by weight in homogeneous material)

(3) MSL, Peak Temp. - The Moisture Sensitivity Level rating according to the JEDEC industry standard classifications, and peak solder temperature.

(4) There may be additional marking, which relates to the logo, the lot trace code information, or the environmental category on the device.

(5) Multiple Device Markings will be inside parentheses. Only one Device Marking contained in parentheses and separated by a "~" will appear on a device. If a line is indented then it is a continuation of the previous line and the two combined represent the entire Device Marking for that device.

(6) Lead/Ball Finish - Orderable Devices may have multiple material finish options. Finish options are separated by a vertical ruled line. Lead/Ball Finish values may wrap to two lines if the finish value exceeds the maximum column width.

Important Information and Disclaimer: The information provided on this page represents TI's knowledge and belief as of the date that it is provided. TI bases its knowledge and belief on information provided by third parties, and makes no representation or warranty as to the accuracy of such information. Efforts are underway to better integrate information from third parties. TI has taken and

continues to take reasonable steps to provide representative and accurate information but may not have conducted destructive testing or chemical analysis on incoming materials and chemicals.
TI and TI suppliers consider certain information to be proprietary, and thus CAS numbers and other limited information may not be available for release.

In no event shall TI's liability arising out of such information exceed the total purchase price of the TI part(s) at issue in this document sold by TI to Customer on an annual basis.

TAPE AND REEL INFORMATION

REEL DIMENSIONS

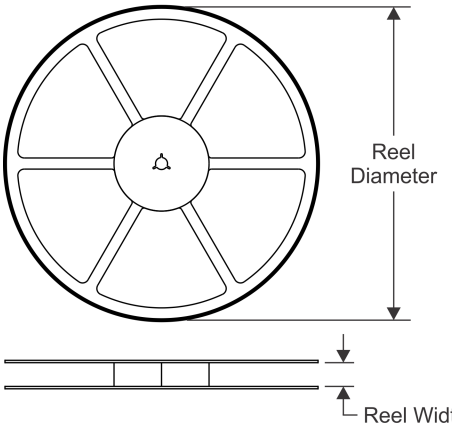

TAPE DIMENSIONS

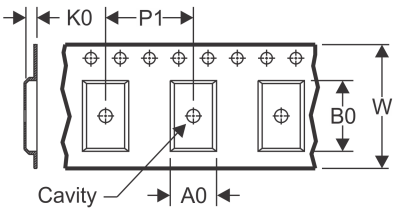

A0	Dimension designed to accommodate the component width
B0	Dimension designed to accommodate the component length
K0	Dimension designed to accommodate the component thickness
W	Overall width of the carrier tape
P1	Pitch between successive cavity centers

QUADRANT ASSIGNMENTS FOR PIN 1 ORIENTATION IN TAPE

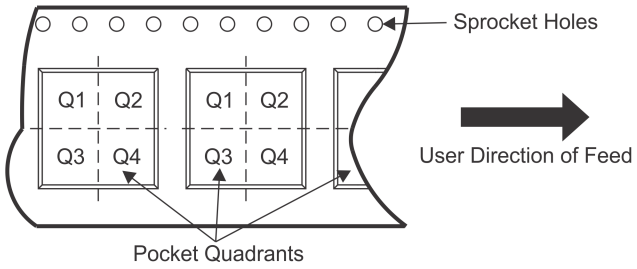

*All dimensions are nominal

Device	Package Type	Package Drawing	Pins	SPQ	Reel Diameter (mm)	Reel Width W1 (mm)	A0 (mm)	B0 (mm)	K0 (mm)	P1 (mm)	W (mm)	Pin1 Quadrant
LMK04906BISQ/NOPB	WQFN	NKD	64	1000	330.0	16.4	9.3	9.3	1.3	12.0	16.0	Q1
LMK04906BISQE/NOPB	WQFN	NKD	64	250	178.0	16.4	9.3	9.3	1.3	12.0	16.0	Q1
LMK04906BISQX/NOPB	WQFN	NKD	64	2000	330.0	16.4	9.3	9.3	1.3	12.0	16.0	Q1

TAPE AND REEL BOX DIMENSIONS

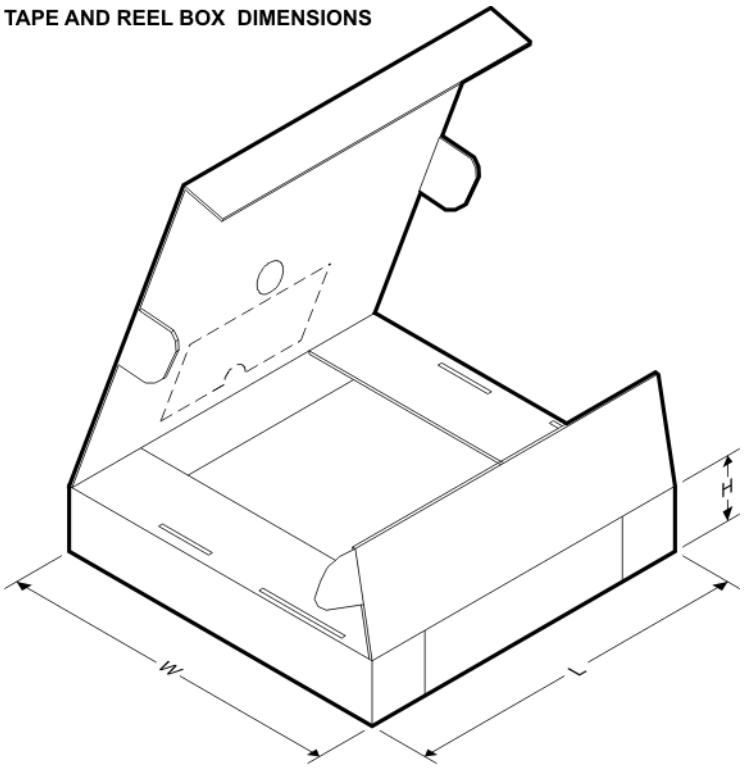

*All dimensions are nominal

Device	Package Type	Package Drawing	Pins	SPQ	Length (mm)	Width (mm)	Height (mm)
LMK04906BISQ/NOPB	WQFN	NKD	64	1000	367.0	367.0	38.0
LMK04906BISQE/NOPB	WQFN	NKD	64	250	210.0	185.0	35.0
LMK04906BISQX/NOPB	WQFN	NKD	64	2000	367.0	367.0	38.0

IMPORTANT NOTICE

Texas Instruments Incorporated (TI) reserves the right to make corrections, enhancements, improvements and other changes to its semiconductor products and services per JESD46, latest issue, and to discontinue any product or service per JESD48, latest issue. Buyers should obtain the latest relevant information before placing orders and should verify that such information is current and complete.

TI's published terms of sale for semiconductor products (http://www.ti.com/sc/docs/stdterms.htm) apply to the sale of packaged integrated circuit products that TI has qualified and released to market. Additional terms may apply to the use or sale of other types of TI products and services.

Reproduction of significant portions of TI information in TI data sheets is permissible only if reproduction is without alteration and is accompanied by all associated warranties, conditions, limitations, and notices. TI is not responsible or liable for such reproduced documentation. Information of third parties may be subject to additional restrictions. Resale of TI products or services with statements different from or beyond the parameters stated by TI for that product or service voids all express and any implied warranties for the associated TI product or service and is an unfair and deceptive business practice. TI is not responsible or liable for any such statements.

Buyers and others who are developing systems that incorporate TI products (collectively, "Designers") understand and agree that Designers remain responsible for using their independent analysis, evaluation and judgment in designing their applications and that Designers have full and exclusive responsibility to assure the safety of Designers' applications and compliance of their applications (and of all TI products used in or for Designers' applications) with all applicable regulations, laws and other applicable requirements. Designer represents that, with respect to their applications, Designer has all the necessary expertise to create and implement safeguards that (1) anticipate dangerous consequences of failures, (2) monitor failures and their consequences, and (3) lessen the likelihood of failures that might cause harm and take appropriate actions. Designer agrees that prior to using or distributing any applications that include TI products, Designer will thoroughly test such applications and the functionality of such TI products as used in such applications.

TI's provision of technical, application or other design advice, quality characterization, reliability data or other services or information, including, but not limited to, reference designs and materials relating to evaluation modules, (collectively, "TI Resources") are intended to assist designers who are developing applications that incorporate TI products; by downloading, accessing or using TI Resources in any way, Designer (individually or, if Designer is acting on behalf of a company, Designer's company) agrees to use any particular TI Resource solely for this purpose and subject to the terms of this Notice.

TI's provision of TI Resources does not expand or otherwise alter TI's applicable published warranties or warranty disclaimers for TI products, and no additional obligations or liabilities arise from TI providing such TI Resources. TI reserves the right to make corrections, enhancements, improvements and other changes to its TI Resources. TI has not conducted any testing other than that specifically described in the published documentation for a particular TI Resource.

Designer is authorized to use, copy and modify any individual TI Resource only in connection with the development of applications that include the TI product(s) identified in such TI Resource. NO OTHER LICENSE, EXPRESS OR IMPLIED, BY ESTOPPEL OR OTHERWISE TO ANY OTHER TI INTELLECTUAL PROPERTY RIGHT, AND NO LICENSE TO ANY TECHNOLOGY OR INTELLECTUAL PROPERTY RIGHT OF TI OR ANY THIRD PARTY IS GRANTED HEREIN, including but not limited to any patent right, copyright, mask work right, or other intellectual property right relating to any combination, machine, or process in which TI products or services are used. Information regarding or referencing third-party products or services does not constitute a license to use such products or services, or a warranty or endorsement thereof. Use of TI Resources may require a license from a third party under the patents or other intellectual property of the third party, or a license from TI under the patents or other intellectual property of TI.

TI RESOURCES ARE PROVIDED "AS IS" AND WITH ALL FAULTS. TI DISCLAIMS ALL OTHER WARRANTIES OR REPRESENTATIONS, EXPRESS OR IMPLIED, REGARDING RESOURCES OR USE THEREOF, INCLUDING BUT NOT LIMITED TO ACCURACY OR COMPLETENESS, TITLE, ANY EPIDEMIC FAILURE WARRANTY AND ANY IMPLIED WARRANTIES OF MERCHANTABILITY, FITNESS FOR A PARTICULAR PURPOSE, AND NON-INFRINGEMENT OF ANY THIRD PARTY INTELLECTUAL PROPERTY RIGHTS. TI SHALL NOT BE LIABLE FOR AND SHALL NOT DEFEND OR INDEMNIFY DESIGNER AGAINST ANY CLAIM, INCLUDING BUT NOT LIMITED TO ANY INFRINGEMENT CLAIM THAT RELATES TO OR IS BASED ON ANY COMBINATION OF PRODUCTS EVEN IF DESCRIBED IN TI RESOURCES OR OTHERWISE. IN NO EVENT SHALL TI BE LIABLE FOR ANY ACTUAL, DIRECT, SPECIAL, COLLATERAL, INDIRECT, PUNITIVE, INCIDENTAL, CONSEQUENTIAL OR EXEMPLARY DAMAGES IN CONNECTION WITH OR ARISING OUT OF TI RESOURCES OR USE THEREOF, AND REGARDLESS OF WHETHER TI HAS BEEN ADVISED OF THE POSSIBILITY OF SUCH DAMAGES.

Unless TI has explicitly designated an individual product as meeting the requirements of a particular industry standard (e.g., ISO/TS 16949 and ISO 26262), TI is not responsible for any failure to meet such industry standard requirements.

Where TI specifically promotes products as facilitating functional safety or as compliant with industry functional safety standards, such products are intended to help enable customers to design and create their own applications that meet applicable functional safety standards and requirements. Using products in an application does not by itself establish any safety features in the application. Designers must ensure compliance with safety-related requirements and standards applicable to their applications. Designer may not use any TI products in life-critical medical equipment unless authorized officers of the parties have executed a special contract specifically governing such use. Life-critical medical equipment is medical equipment where failure of such equipment would cause serious bodily injury or death (e.g., life support, pacemakers, defibrillators, heart pumps, neurostimulators, and implantables). Such equipment includes, without limitation, all medical devices identified by the U.S. Food and Drug Administration as Class III devices and equivalent classifications outside the U.S.

TI may expressly designate certain products as completing a particular qualification (e.g., Q100, Military Grade, or Enhanced Product). Designers agree that it has the necessary expertise to select the product with the appropriate qualification designation for their applications and that proper product selection is at Designers' own risk. Designers are solely responsible for compliance with all legal and regulatory requirements in connection with such selection.

Designer will fully indemnify TI and its representatives against any damages, costs, losses, and/or liabilities arising out of Designer's non-compliance with the terms and provisions of this Notice.

Mailing Address: Texas Instruments, Post Office Box 655303, Dallas, Texas 75265
Copyright © 2017, Texas Instruments Incorporated