CUI INC®



# **SERIES:** VOF-15 | **DESCRIPTION:** AC-DC POWER SUPPLY

## FEATURES

- up to 15 W continuous power
- compact size
- universal input (85~264 Vac / 120~375 Vdc)
- single output from 3.3~48 Vdc
- no minimum load required
- 3000 Vac isolation
- over current, over voltage, and short circuit protections
- UL/cUL and TUV 60950-1 safety approvals
- no load power consumption < 0.5 W
- efficiency up to 83%

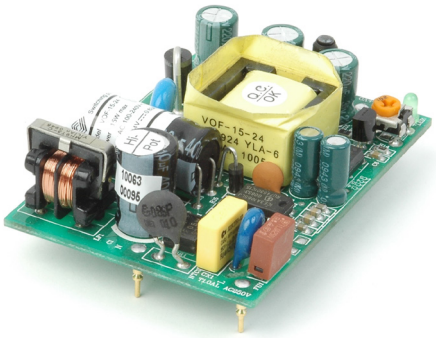

| MODEL | output voltage (Vdc) | output current max (A) | output power max (W) | ripple[1] and noise max (mVp-p) | efficiency typ (%) |
|---|---|---|---|---|---|
| VOF-15-3.3 | 3.3 | 3.0 | 9.9 | 100 | 70 |
| VOF-15-5 | 5 | 3.0 | 15 | 100 | 75 |
| VOF-15-9* | 9 | 1.67 | 15 | 120 | 78 |
| VOF-15-12 | 12 | 1.25 | 15 | 120 | 80 |
| VOF-15-15 | 15 | 1.0 | 15 | 150 | 80 |
| VOF-15-24 | 24 | 0.63 | 15 | 240 | 82 |
| VOF-15-48 | 48 | 0.31 | 15 | 480 | 83 |

Notes: 1. Ripple & noise are measured at 20 MHz BW with 47 µF ceramic and 100 nF electrolytic capacitors on the output
*. Discontinued

## PART NUMBER KEY

**VOF-15 - XX**

Base Number — Output Voltage

## INPUT

| parameter | conditions/description | min | typ | max | units |
|---|---|---|---|---|---|
| voltage | | 85<br>120 | | 264<br>375 | Vac<br>Vdc |
| frequency | | 47 | | 63 | Hz |
| current | | | | 0.6 | A |
| inrush current | 110 Vac, full load, cold start<br>220 Vac, full load, cold start | | | 20<br>40 | A<br>A |
| input fuse | built-in, non-user serviceable | | | | |

## OUTPUT

| parameter | conditions/description | min | typ | max | units |
|---|---|---|---|---|---|
| line regulation | 3.3 Vdc model<br>all other models | | ±0.6<br>±0.5 | | %<br>% |
| load regulation | 3.3 Vdc model<br>all other models | | ±1.2<br>±1 | | %<br>% |
| temperature coefficient | | | ±0.05 | | %/°C |
| hold-up time | at 115 Vac, full load | | 16 | | ms |
| adjustability | adjustable with built-in trim pot | | ±5 | | % |
| switching frequency | | | 100 | | kHz |
| no load power consumption | | | | 0.5 | W |

## PROTECTIONS

| parameter | conditions/description | min | typ | max | units |
|---|---|---|---|---|---|
| over voltage protection | clamped by TVS | | | | |
| over current protection | 5 Vdc model latches off<br>all other models automatically recover | | <br>105 | | <br>% |
| short circuit protection | protected, long term short circuit may reduce reliability | | | | |

## SAFETY & COMPLIANCE

| parameter | conditions/description | min | typ | max | units |
|---|---|---|---|---|---|
| isolation voltage | input to output at 20 mA for 1 minute | | 3,000 | | Vac |
| isolation resistance | input to output at 500 Vdc at 25°C | 50 | | | MΩ |
| safety approvals | TUV EN 60950, UL/cUL 60950-1 | | | | |
| EMI/EMC | FCC class B, EN 55022 class B, CE | | | | |
| leakage current | | | | 0.25 | mA |
| RoHS | 2011/65/EU | | | | |
| MTBF | according to MIL-HDBK-217F | 250,000 | | | hours |

## ENVIRONMENTAL

| parameter | conditions/description | min | typ | max | units |
|---|---|---|---|---|---|
| operating temperature | see derating curve | 0 | | 60 | °C |
| storage temperature | | -25 | | 75 | °C |
| operating humidity | non-condensing | 20 | | 90 | % |
| storage humidity | non-condensing | 20 | | 90 | % |

## MECHANICAL

| parameter | conditions/description | min | typ | max | units |
|---|---|---|---|---|---|
| dimensions | 70 x 48.6 x 18 (2.76 x 1.91 x 0.71 inches) | | | | mm |
| cooling method | free air convection (see derating curve below) | | | | |

## DERATING CURVES

1. output power vs. ambient temp.

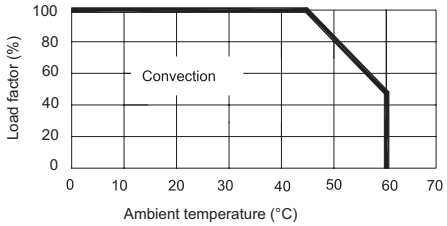


2. output power vs. input voltage

a. 3.3, 5 V models

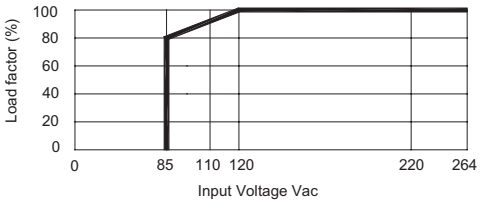


b. all other models

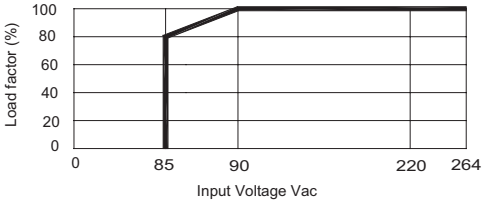


## MOUNTING METHOD

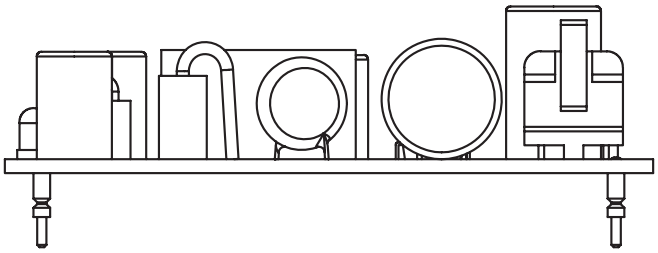

**Horizontal**

(performance evaluations conducted under this mounting method)

## MECHANICAL DRAWING

units: mm [inches]
tolerance: ±0.3 [±0.01]
unless otherwise noted

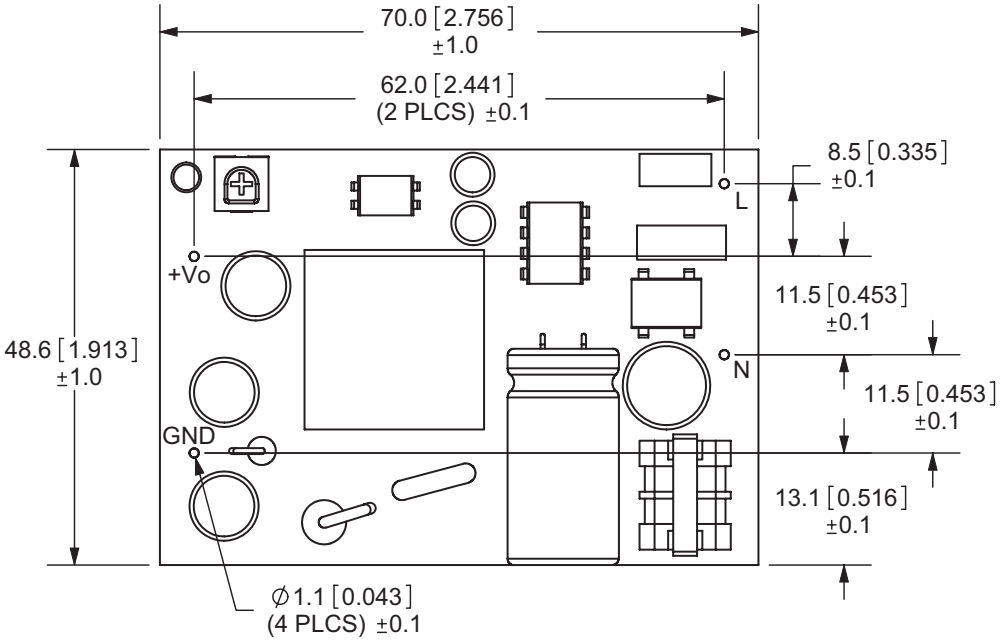


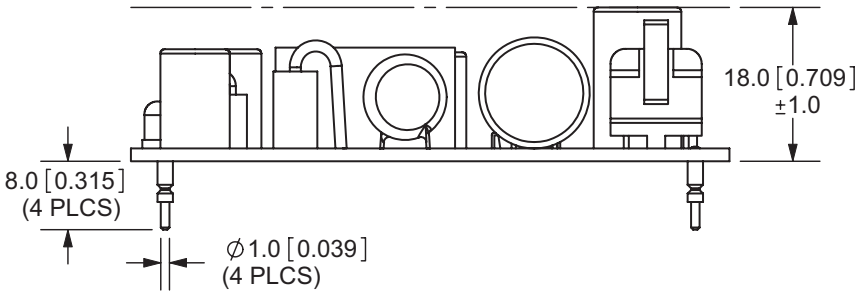


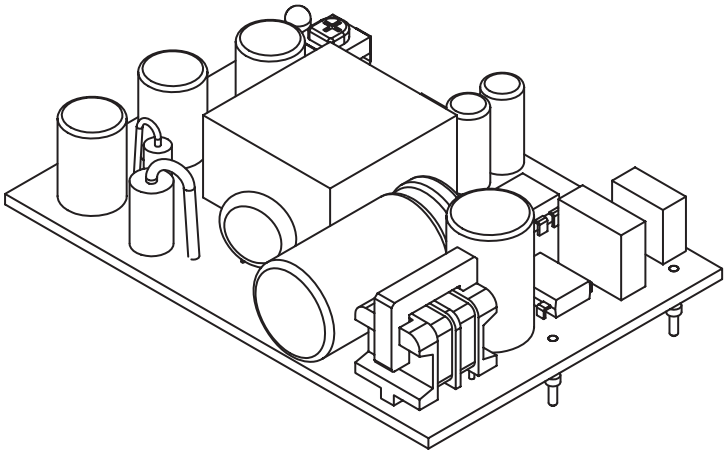

## REVISION HISTORY

| rev. | description | date |
|---|---|---|
| 1.0 | initial release | 03/18/2010 |
| 1.01 | applied new spec template | 05/13/2011 |
| 1.02 | added MTBF data | 09/20/2011 |
| 1.03 | V-Infinity branding removed | 08/16/2012 |
| 1.04 | 5 Vdc model latches off during OCP, outer dimension tolerance changed, discontinued 9 Vdc model | 12/30/2015 |

The revision history provided is for informational purposes only and is believed to be accurate.

CUI INC®

**Headquarters**
20050 SW 112th Ave.
Tualatin, OR 97062
**800.275.4899**

Fax 503.612.2383
**cui**.com
techsupport@cui.com

CUI offers a two (2) year limited warranty. Complete warranty information is listed on our website.

CUI reserves the right to make changes to the product at any time without notice. Information provided by CUI is believed to be accurate and reliable. However, no responsibility is assumed by CUI for its use, nor for any infringements of patents or other rights of third parties which may result from its use.

CUI products are not authorized or warranted for use as critical components in equipment that requires an extremely high level of reliability. A critical component is any component of a life support device or system whose failure to perform can be reasonably expected to cause the failure of the life support device or system, or to affect its safety or effectiveness.