REV.	DESCRIPTION	DATE
A	NEW DRAWING	5/17/2006
B	hand soldering note added	4/23/2009

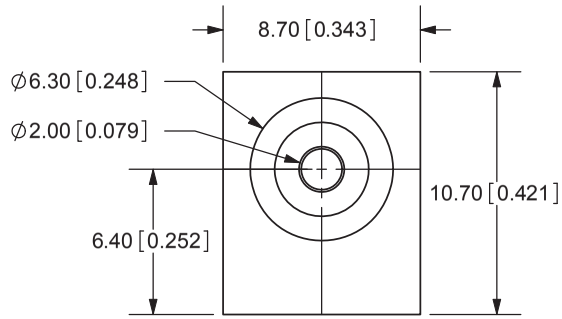

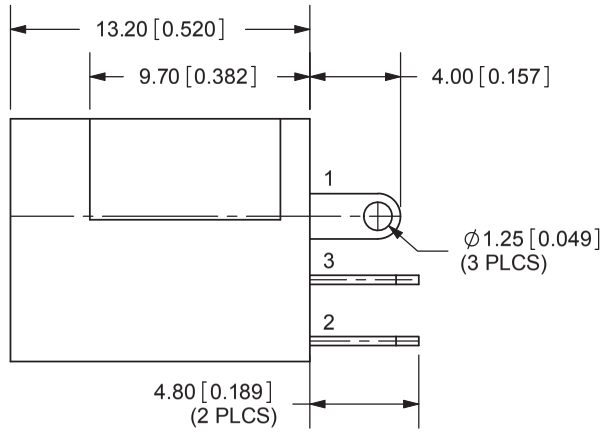

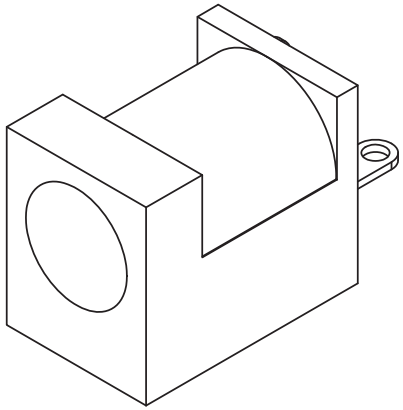

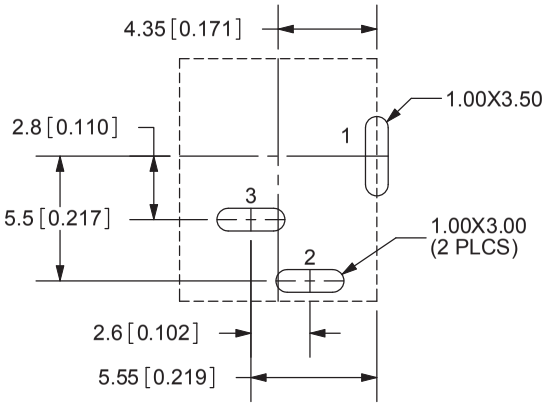

PCB LAYOUT
BACK VIEW

NOTE:
1. FOR HAND SOLDERING ONLY

TOLERANCE:
±0.3mm UNLESS OTHERWISE SPECIFIED

SPECIFICATIONS:
RATING: 16V DC @ 2A
CONTACT RESISTANCE: 30m OHMS MAX
INSULATION RESISTANCE: 100M OHMS MIN: 500V DC
VOLTAGE WITHSTAND: 500V AC R.M.S. FOR 1 MINUTE
LIFE: 5,000 CYCLES
OPERATING TEMP: -20° ~ +85°C

MODEL NO.	PJ-006A
SCHEMATIC	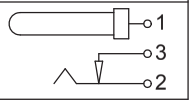

CENTER PIN DIAMETER 2.0mm

	MATERIAL	PLATING
CENTER PIN	Copper	Nickel
TERMINAL 1	Brass	Silver
TERMINAL 2	Phosphor Bronze	Silver
TERMINAL 3	Brass	Silver
HOUSING	PBT	

CUI INC
20050 SW 112th Ave.
Tualatin, OR 97062
Phone: 503-612-2300
800-275-4899
Fax: 503-612-2383
Website: www.cui.com

TITLE: DC POWER JACK		REV: B
PART NO. PJ-006A	UNITS: MM [INCHES]	
DRAWN BY: ZRJ	APPROVED BY:	SCALE: 3:1

PC FILE NAME: PJ-006A

COPYRIGHT 2009 BY CUI INC.

For more information, please visit the product page | For information on related products, view External Power Supplies