CUI INC

Part No: CEB-44D06

Description: piezo electric diaphragm

Date: 7/28/2006
Unit: mm

RoHS

Specifications

Maximum input voltage	20 Vp-p	
Resonant frequency	0.6 ± 0.3 KHz	see Measurement Methods
Resonant impedance	1000 Ω max.	see Measurement Methods
Electrostatic capacitance	70,000 ±30% pF	at 120 Hz / 1 V
Operating temperature	-20 ~ +70° C	
Storage temperature	-30 ~ +80° C	
Dimensions	ø44.0 x H0.23 mm	
Weight	5.10 g max.	
Material	Brass	
Terminal	Wire type	
DC resistance	20 M Ω min.	Fluke 45 rate: Fast Measurement time: 1 second (only for ≤ 20 mm test)
RoHS	yes	

Appearance Drawing

Tolerance: ±0.5

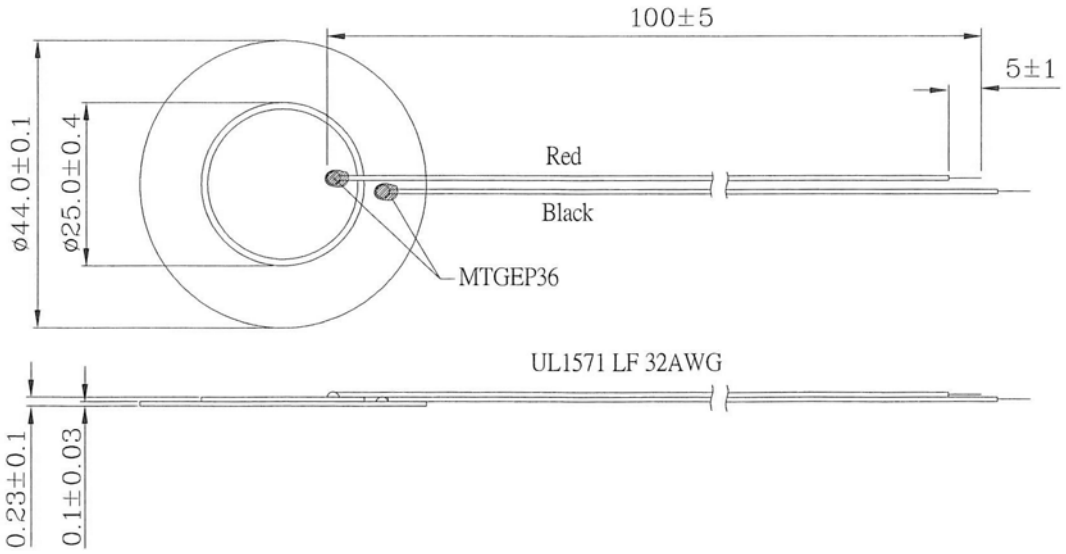

Measuring Methods

1) Resonant frequency / Resonant impedance

The piezo electric diaphragm should be clamped at a node point (as shown in the following figure) to be free from any mechanical stress. Measure its resonant frequency and resonant impedance by using a vector impedance analyzer or equivalent.

When the input frequency is swept within 100 Hz to 3 KHz, the resonant frequency is defined as the frequency where the impedance shows minimum value. This impedance should be the resonant impedance.

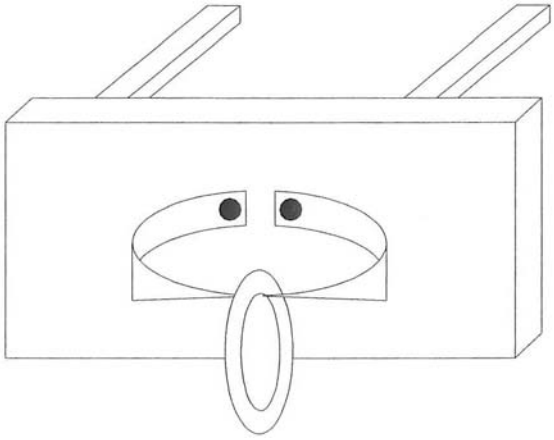

2) Static capacitance

The electrostatic capacitance should be measured at 120 Hz by using an L.C.R. meter (ex. HP4194A(H.P.)) or equivalent. The part should be clamped in the same way as the measurement or resonant frequency / resonant impedance mentioned above.

Mechanical Characteristics

Item	Test Condition	Evaluation Standard
Solderability (Connector excepted)	Stripped wires of lead wires are immersed in rosin for 5 seconds and then immersed in solder bath of 270 ±5°C for 3 ±0.5 seconds.	90% min. of the stripped wires will be wet with solder. (Except the edge of the terminal)
Lead Wire Pull Strength	The horizontal force of 3.0N (0.306kg) should be applied to the double lead wire for 30 sec.	No damage or cutting off.
Vibration	The diaphragm should be measured after applying a vibration amplitude of 1.5 mm with 10 to 55 Hz band of vibration frequency to each of the 3 perpendicular directions for 2 hours.	The value of the resonant frequency should be ±10% of the initial measurements. Electrostatic capacitance should be ±20% compared with the initial measurement. The SPL should be within ±10dB compared with the initial measurement.

Environment Test

Item	Test Condition	Evaluation Standard
High temp. test	After being placed in a chamber at +80°C for 240 hours.	The diaphragm will be measured after being placed at +25°C for 4 hours. The value of the resonant frequency should be ±10%, the value of the electro static capacitance should be ±20% compared to the initial measurements. The resonant impedance should be 2,000 Ω max.
Low temp. test	After being placed in a chamber at -30°C for 240 hours.	
Humidity test	After being placed in a chamber at +40°C and 90±5% relative humidity for 240 hours.	
Temp. cycle test	The part shall be subjected to 5 cycles. One cycle will consist of: 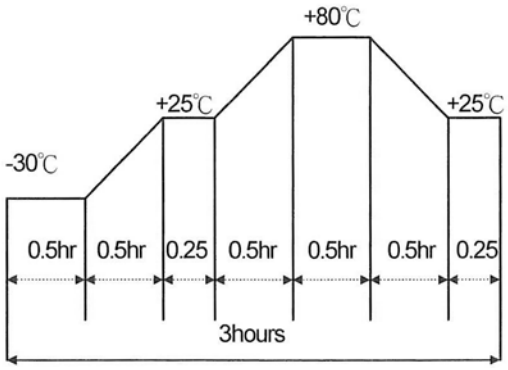	

Test Conditions

Standard Test Condition	a) Tempurature: +5 ~ +35°C	b) Humidity: 45 - 85%	c) Pressure: 860-1060 mbar
Judgement Test Condition	a) Tempurature: +25 ±2°C	b) Humidity: 60 - 70%	c) Pressure: 860-1060 mbar

Packaging

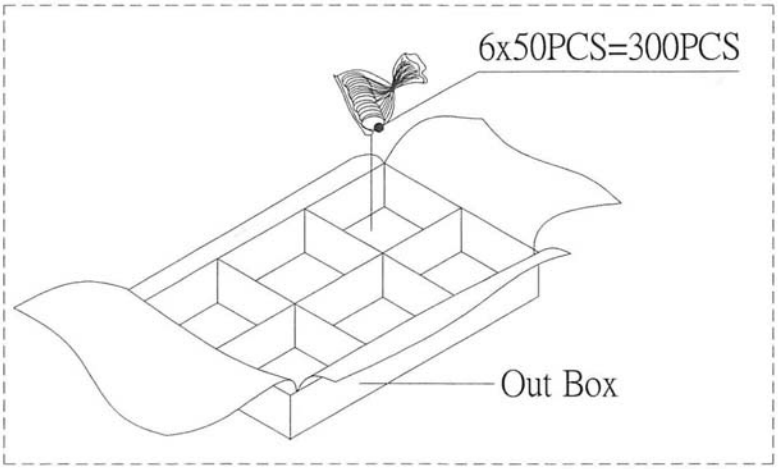

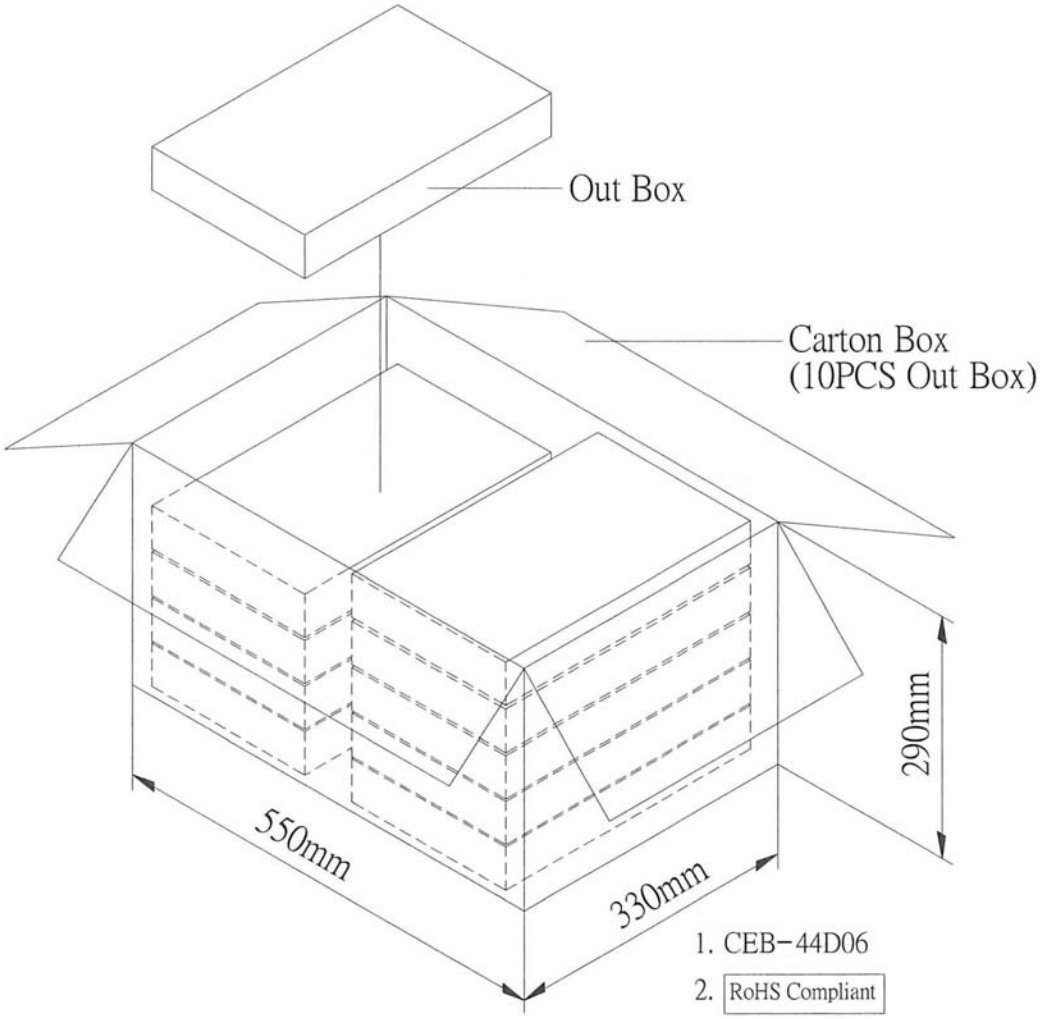

Out Box	310mmx248mmx49mm	6x50PCS=300PCS
Carton Box	550mmx330mmx290mm	300PCSX10=3,000PCS