For more information, please visit the product page.

SIDE VIEW

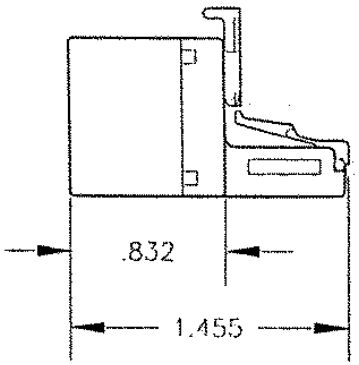

FRONT VIEW

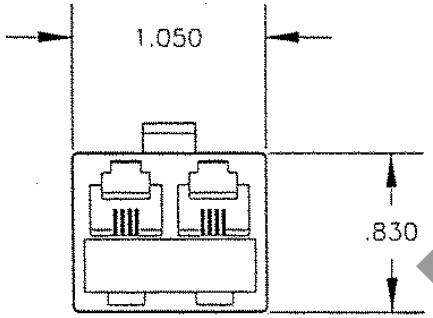

BACK VIEW

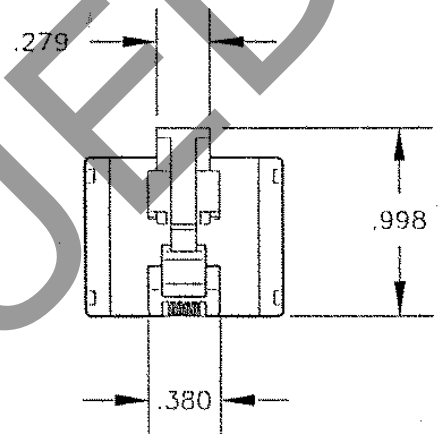

PERSPECTIVE VIEW

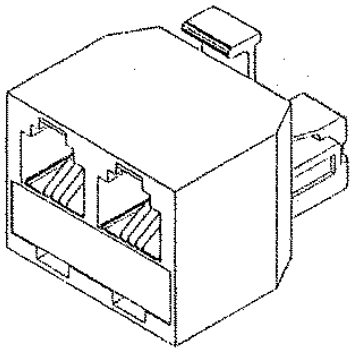

WIRING SCHEMATIC

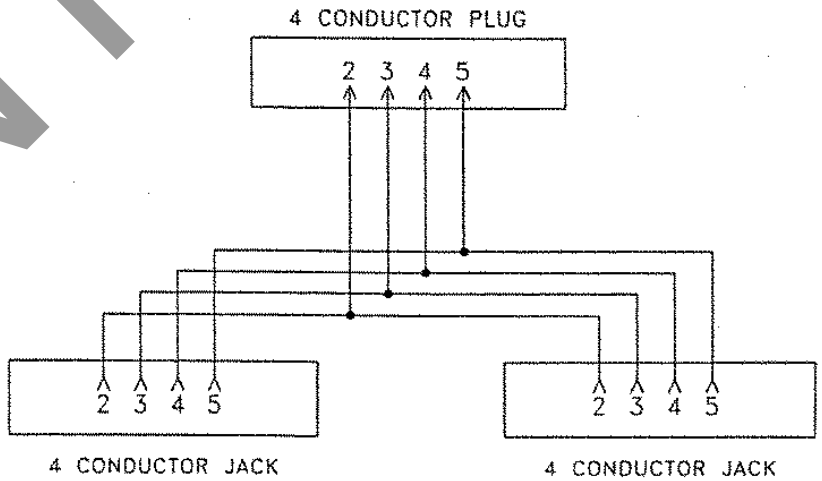

1. BLOCK HOUSING : ABS MOLDING COMPOUND
   CONTACTS : PHOSPHOR BRONZE, 50 μ INCHES GOLD OVER NICKEL PLATE
2. ALL DIMENSIONS ARE APROXIMATE & SHOULD BE USED FOR REFERENCE ONLY.
3. UL LISTING E136760

RoHS

CUI STACK

DESCRIPTION: MODULAR T-ADAPTER, 6 POSITION 4 CONTACTS	CHK:	APRVD:	REV.: A
COLOR: LIGHT ASH			
MATERIAL: 1			
DWG NO. D.S. 1486			

DWG BY: A. MEDINA
DATE: 02-22-2000
DO NOT SCALE
PART NO.: AMK-0026

DISCONTINUED